© 2020 Architects Gallegos + Eckle inc. dba AlphaStudio Design Group

T:\ASDG Projects\Active Projects\23-002 LUSD Central Kitchen Improvements\23-002 LUSD Central Kitchen Improvements_Draft_23-03-17.pln

CENTRAL KITCHEN IMPROVEMENTS

LAKESIDE UNION SCHOOL DISTRICT

SHEET INDEX

SHEET TOTAL: 49

ARCHITECTURAL

COVER SHEET & GENERAL INFO

T-001	COVER SHEET
T-002	APPLICABLE CODES AND GENERAL NOTES
T-003	ABBREVIATIONS AND TYPICAL SYMBOLS

SITE PLANS

A-101	OVERALL SITE PLAN
A-102	DEMOLITION FLOOR PLAN
A-103	NEW WORK FLOOR PLAN
A-104	DEMOLITION REFLECTED CEILING PLAN
A-105	NEW WORK REFLECTED CEILING PLAN
A-106	ACOUTICAL TILE CEILING DETAILS
A-107	ACOUTICAL TILE CEILING DETAILS
A-108	DEMOLITION ROOF PLAN
A-109	NEW WORK ROOF PLAN
A-110	DETAILS AND FINISH SCHEDULE

STRUCTURAL

S1.0	STRUCTURAL NOTES & DETAILS
S2.0	PARTIAL ROOF FRAMING PLAN

MECHANICAL

M001	MECHANICAL NOTES AND LEGEND
MD101	MECHANICAL DEMOLITION FLOOR PLAN
MD102	MECHANICAL DEMOLITION ROOF PLAN
M101	MECHANICAL NEW WORK FLOOR PLAN
M102	MECHANICAL NEW WORK ROOF PLAN
M501	MECHANICAL DETAILS
M601	MECHANICAL SCHEDULES
M701	MECHANICAL CONTROLS

ELECTRICAL

E1.0	ELECTRICAL LEGEND AND NOTES
E2.0	TITLE 24
E2.1	KITCHEN FLOOR PLAN - LIGHTING
E2.2	LIGHTING DETAILS
E3.1	KITCHEN FLOOR PLAN - POWER
E6.1	KTICHEN ROOF PLAN
E7.1	ONE LINE DIAGRAM
E10.1	REFLECTED CEILING PLAN - DEMO

PLUMBING

P001	PLUMBING NOTES AND LEGEND
PD100	PLUMBING DEMOLITION SITE PLAN
PD101	PLUMBING DEMOLITION WASTE AND VENT FLOOR PLAN
PD102	PLUMBING DEMOLITION WATER AND GAS FLOOR PLAN
P100	PLUMBING NEW WORK SITE PLAN
P101	PLUMBING WASTE AND VENT NEW WORK FLOOR PLAN
P102	PLUMBING WATER AND GAS NEW WORK FLOOR PLAN
P501	PLUMBING GAS ISOMETRIC DIAGRAM
P601	PLUMBING SCHEDULES

FOOD SERVICE

K1.0	EQUIPMENT LAYOUT
K2.0	PLUMBING ROUGH-IN PLAN
K2.1	ELECTRICAL ROUGH-IN PLAN
K3.0	EXHAUST SYSTEM DETAILS
K3.1	EXHAUST SYSTEM DETAILS
K3.2	EXHAUST SYSTEM DETAILS
K3.3	EXHAUST SYSTEM DETAILS
K3.4	EXHAUST SYSTEM DETAILS
K3.5	EXHAUST SYSTEM DETAILS

PROJECT DIRECTORY

CLIENT:
LAKESIDE UNION SCHOOL DISTRICT
12335 WOODSIDE AVE
LAKESIDE, CA 92040

ARCHITECT:
ALPHASTUDIO DESIGN GROUP
6152 INNOVATION WAY
CARLSBAD, CALIFORNIA 92009
P: 760-431-2444

ELECTRICAL:
JOHNSON CONSULTING ENGINEERS, INC.
12875 BROOKPRINTER PL. SUITE 300
POWAY, CA 92064
P: 858-679-4030

MECHANICAL/PLUMBING:
AKELA ENGINEERING & CONSULTING
10150 MEANLEY DRIVE, SUITE 250
SAN DIEGO, CA 92131
P: 858-638-0600

STRUCTURAL:
WISEMAN AND ROHY STRUCTURAL ENGINEERS
9915 MIRA MESA BLVD STE 200
SAN DIEGO, CA 92131
P: 858-536-5166

PROJECT SCOPE

THE PROJECT SCOPE INCLUDES KITCHEN UPGRADES TO THE LAKESIDE UNIFIED SCHOOL DISTRICT CENTRAL KITCHEN.

VICINITY MAP

LAKESIDE UNION SCHOOL DISTRICT
12335 WOODSIDE AVE
LAKESIDE, CA 92040

ALPHASTUDIO DESIGN GROUP

6152 INNOVATION WAY
CARLSBAD, 92009
760-431-2444
www.alphastudio-design.com

ARCHITECT OF RECORD

LICENSED ARCHITECT
PAUL R. GALLEGOS
No. C24063
EXP. 01/25
STATE OF CALIFORNIA

ENGINEER OF RECORD

CENTRAL KITCHEN IMPROVEMENTS
LAKESIDE UNION SCHOOL DISTRICT
12335 WOODSIDE AVE
LAKESIDE, CA 92040

LAKESIDE UNION SCHOOL DISTRICT
12335 WOODSIDE AVE LAKESIDE CA 92040

REVISIONS

MARK	DATE	DESCRIPTION

PROJECT NO: #PIn

MODEL FILE:
23-002 LUSD Central Kitchen Improvements_Draft_23-03-17.pln

PLOT DATE:
5/22/2023

SHEET TITLE

COVER SHEET

T-001

© 2020 Architects Gallegos + Eckle inc. dba AlphaStudio Design Group

T:\ASDG Projects\Active Projects\23-002 LUSD Central Kitchen Improvements\23-002 LUSD Central Kitchen Improvements_Draft_23-03-17.pln

CENTRAL KITCHEN IMPROVEMENTS

LAKESIDE UNION SCHOOL DISTRICT

GENERAL CONSTRUCTION NOTES

1. ALL CONSTRUCTION SHALL BE IN ACCORDANCE WITH THE APPLICABLE CODES LISTED ON THIS SHEET. IT IS THE CONTRACTOR'S RESPONSIBILITY TO BE FAMILAR WITH ALL CODES AND ORDINANCES, CITY OR STATE AS REQUIRED FOR THE CONSTRUCTION OF THE FOLLWOING PROJECT. WHERE CONFLICTS OCCUR BETWEEN FEDERAL, STATE, AND LOCAL LAWS, CODES, ORDINANCES, AND REGULATIONS, THE MOST STRINGENT SHALL GOVERN,

2. ALL MATERIALS AND WORKMANSHIP SHALL CONFORM TO THE REQUIREMENTS OF BOTH THE UNIFORM BUILDING CODE AND TITLE 24, CALIFORNIA CODE OF REGULATIONS.

3. THE CONTRACTOR SHALL FIELD VERIFY ALL EXISTING CONDITIONS PRIOR TO THE START OF WORK. THE EXISTING CONDITIONS SHALL INCLUDE, BUT NOT BE LIMITED TO: IRRIGATION, DRAINAGE, SITE MEHCANICAL, PLUMBING, AND ELECTRICAL. THE CONTRACTOR SHALL NOTIFY THE ARCHTIECT OF ANY DISCREPANCIES IN SITE CONDITIONS AND CONTRACT DOCUMENTS. FAILURE TO NOTIFY WHILE PROCEEDING WITH WORK SHALL IMPLY ACCEPTANCE OF THE SITE CONDITIONS BY THE CONTRACTOR FOR THE WORK INTENDED.

4. THE CONTRACTOR SHALL PROVIDE ADEQUATE AND SAFE BRACING TO SUPPORT THE COMPONENTS OF THE STRUCTURE UNTIL THE STRUCTURE ITSELF, FLOOR AND ROOF DIAPHRAGMS ARE COMPLETE ENOUGH TO SUPPORT ITSELF. THE SAFETY AND ERECTION OF BRACING SHALL BE THE SOLE RESPONSIBILITY OF THE CONTRACTOR.

5. IT SHALL BE THE RESPONSIBILITY OF THE CONTRACTOR TO VERIFY THERE ARE NO DISCREPENCIES BEWTEEN THE ARCHITECTURAL DRAWINGS AND THE CONSULTING ENGINEER'S DRAWINGS WHICH WOULD CAUSE A CONFLICT IN THE INSTALLATION OF THE SYSTEMS. IF SUCH A CONFLICT DOES OCCUR, IT SHALL BE THE CONTRACTOR'S RESPONSIBILITY TO ALERT THE ARCHITECT TO THE SITUATION PRIOR TO INSTALLATION. ANY WORK INSTALLED IN CONFLICT SHALL BE THE CONTRACTORS RESPONSIBILITY TO REMEDY WITH NO ADDITIONAL COST TO THE OWNER.

6. THE CONTRACTOR SHALL REFER TO THE SPECIFICATIONS FOR A COMPLETE LIST OF GENERAL CONDITIONS, SPECIAL CONDITIONS, AND MATERIAL INSTALLATION METHODOLOGY.

7. TYPICAL NOTES AND DETAILS SHALL APPLY UNLESS SHOWN OTHERWISE, WHERE A CONSTRUCTION DETAIL IS NOT SHOWN OR NOTED, THE DETAIL SHALL BE THE SAME AS FOR A SIMILAR CONDITION.

8. THE CONTRACTOR SHALL FIELD VERIFY ALL EXISTING DIMENSIONS, SERVICES, POINTS OF CONNECTION, AND IRRIGATION LINES IN THE CONSTRUCTION AREA PRIOR TO COMMENCEMENT OF WORK. IF PROPER VERIFICATION IS NOT DONE PRIOR TO WORK COMMENCING, AND DAMAGE IS INCURRED THE CONTRACTOR SHALL REPAIR THE DAMAGE AT NO COST TO THE OWNER.

9. ALL DRAWINGS ARE FOR ILLUSTRATION ONLY, THE CONTRACTOR AND SUBCONTRACTORS, SHALL NOT LOCATE ITEMS BY SCALING. IF ITEMS ARE MISLOCATED DUE TO SCALING, THE CONTRACTOR SHALL BE RESPONSIBLE FOR REMOVING AND CORRECTLY INSTALLING THE ITEMS AT NO EXPENSE TO THE OWNER.

10. IT IS THE INTENT OF THESE DRAWINGS TO INDICATE A COMPLETE AND FINISHED PRODUCT AND / OR ABUTING EXISTING CONDITION IN A FINSHED AND PROFESSIONAL MANNER.

11. IT IS THE CONTRACTOR'S RESPONSIBILITY TO KEEP THE AREA AROUND THE WORK IN A CLEAN AND SAFE CONDITION. ALL TRASH AND DEBRIS SHALL BE REMOVED FROM THE SITE AND DISPOSED OF IN A LAWFUL MANNER. AREA OF WORK SHALL BE COMPLETELY CLEANED AND READY FOR OCCUPANCY UPON COMPLETION OF WORK.

12. ALL WORK SHALL CONFORM TO TITLE 24 CA CODE OF REGULATIONS. A COPY OF TITLE 24, PARTS 1-5, SHALL BE AVAILABLE ON THE JOBSITE AT ALL TIMES.

13. CHANGES TO THE APPROVED DRAWINGS SHALL BE MADE BY ADDENDA OR CONSTRUCTION CHANGE DOCUMENT (CCD) APPROVED BY DSA, AS REQUIRED BY SEC. 4-338, PART 1, T-24, CCR. ALL ADDENDA AND CONSTRUCTION CHANGE DOCUMENTS SHALL BE SIGNED BY THE ARCHITECT.

14. A PROJECT INSPECTOR EMPLOYED BY THE OWNER AND APPROVED BY DSA, ARCHTIECT OF RECORD & STRUCTURAL ENGINEER OF RECORD (WHERE APPLICABLE), SHALL PROVIDE CONTINUOUS INSPECTION OF THE WORK. THE DUTIES OF THE INSPECTOR ARE DEFINED IN SECTION 4-342 PART 1, T-24 CCR. THE INSPECTOR SHALL BE A CLASS _____.

15. A DSA ACCEPTED TESTING LABORATORY DIRECTLY EMPLOYED BY THE OWNER SHALL CONDUCT ALL REQUIRED TESTING AND SPECIAL INSPECTIONS FOR THE PROJECT AS IDENTIFIED ON THE DSA 103 TESTING AND INSPECTION FORM.

16. THE PROJECT SHALL CONFORM TO CURRENT ADA STANDARDS 2019 CBC CHAPTER 11 B.

17. FOOD HANDLING FACILITIES SHALL COMPLY WITH ALL LOCAL HEALTH REQUIREMENTS AND CALIFORNIA UNIFORM RETAIL FOOD FACILITIES LAWS.

18. THE INTENT OF THESE DRAWINGS AND SPECIFICATIONS IS THAT THE WORK OF THE ALTERATION, REHABILITATION OR RECONSTRUCTION IS TO BE IN ACCORDANCE WITH TITLE 24, CALIFORNIA CODE OF REGULATIONS, SHOULD ANY EXISTING CONDITIONS SUCH AS DETERIORATION OF NONCOMPLYING CONSTRUCTION BE DISCOVERED WHICH IS NOT COVERED BY THE CONTRACT DOCUMENTS WHEREIN THE FINISHED WORK WILL NOT COMPLY WITH TILE 24, CALIFORNIA CODE OF REGULATIONS, A CCD, OR A SEPARATE SET OF PLANS AND SPECIFICATIONS, DETAILING AND SPECIFYING THE REQUIRED WORK SHALL BE SUBMITTED TO AND APPROVED BY THE DIVISION OF STATE ARCHITECT BEFORE PROCEEDING WITH THE WORK.

19. THE ARCHITECT AND OR ENGINEER SHALL MAKE PERIODIC SITE VISITS DURING CONSTRUCTION TO OBSERVE THE PROGRESS OF THE WORK AND VERIFY GENERAL CONFORMANCE TO THE PLANS AND SPECIFICATIONS IS BEING MET. THESE VISIT DO NOT CONSTITUTE A GUARANTEE OF THE CONTRACTOR'S WORK. A CONTRACTOR'S ERROR THAT GOES UNDETECTED DURING A PERIODIC VISIT DOES NOT RELIEVE THE CONTRACTOR OF THE RESPONSIBILITY FOR PROPERLY PERFORMING THE SCOPE OF THE PROJECT.

20. IT IS THE CONTRACTOR'S RESPONSIBILITY TO PROTECT ADJACENT STRUCTURES, PROPERTY, AND SITE FEATURES DURING CONSTRUCTION. ANY DAMAGE TO SUCH ITEMS SHALL BE PROMPTLY RESTORED TO THE SATISFACTION OF THE OWNER AND ARCHITECT.

21. CONTRACTORS AND SUBCONSTRATORS ARE REQUIRED TO SUBMIT THEIR BIDS BASED ON ALL DRAWINGS AND SPECIFICATIONS, NOT SOLELY THE SHEETS OR SECTIONS RELEVANT TO THEIR TRADE.

22. THE DRAWINGS AND SPECIFICATIONS ARE INTENDED TO BE COMPLIMENTARY IN NATURE, HOWEVER IF A DISCREPANCY OCCURS BETWEEN THE TWO DOCUMENTS, THE MORE STRINGENT REQUIREMENT AND HIGHEST LEVEL OF QUALITY SHALL TAKE PRECENDENCE.

23. ALL DETAILS PROVIDED IN THE CONSTRUCTION DOCUMENTS ARE A PART OF THE CONSTRUCTION SCOPE REGARDLESS OF WHETHER THEY ARE SPECIFICALLY REFERENCED.

GENERAL DEMOLITION NOTES

1. DEMOLITION PLANS REFERENCE GENERAL ITEMS AND CONDITION VARIATIONS MAY OCCUR WITHIN AREA OF DEMOLITION AND SHALL BE TREATED AS SIMILAR.

2. NOT ALL LOCATIONS FOR DEMOLITION MAY BE NOTED. CONTRACTOR SHALL REVIEW THE PROJECT REQURIEMENTS AND BE FAMLIAR WITH THE EXISTING SITE CONDITIONS FOR EVALUATION OF DEMOLITION WORK NECESSARY TO COMPLETE THE NEW WORK.

3. KEY NOTES REFERENCE GENERAL ELEMENTS FOR DISPOSAL OR SALVAGE. VARIOUS ASSOCIATED ITEMS MAY OCCUR AND SHALL BE REMOVED ACCORDING TO THE NEEDS AND DESIGN INTENT OF THE NEW CONSTRUCTION.

4. THE CONTRACTOR SHALL NOT REMOVE OR ALTER ANY BUILDING ELEMENTS OR SYSTEMS NECESSARY FOR THE BUILDING'S STRUCTURAL INTERGRITY WITHOUT PRIOR AUTHORIZATION FROM THE ARCHITECT AND/OR STRUCTURAL ENGINEER OF RECORD.

5. CONTRACTOR SHALL NOT ALTER OR REMOVE ANY SHEAR WALLS OR BEARING WALLS UNLESS IDENTIFIED ON THE DRAWINGS WITH APPROPRIATE DETAILS. THE COTNRACTOR SHALL TAKE PRECAUTIONS DURING DEMOLITION AND CONSTRUCTION ACITIVITES TO NOT EFFECT THE EXISTING STRUCTURAL SYSTEM OF THE BUILDING. IF DURING THE COURSE OF THE WORK, ELEMENTS THAT ARE IDENTIFIED TO BE DEMOLISHED, BUT APPEAR STRUCTURAL IN NATURE AND NOT IDENTIFIED AS SUCH, THE CONTRACTOR SHALL NOTFIY THE ARCHITECT IMMEDIATELY. THE CONTRACTOR SHALL NOT PROCEED WITH THE DEMOLITION OF SUCH ELEMENTS WITHOUT THE DIRECTION OF THE ARCHITECT AND/OR STRUCTURAL ENGINEER OF RECORD.

6. AFTER THE DEMOLITION AND REMOVAL OF ELEMENTS, REPAIR AND RESTORE EXISTING FINISHES TO BE LEFT EXPOSED TO THEIR ORIGINAL CHARACTER. WHERE EXISTING FINISHES ARE TO BE HIDDEN WITH NEW MATERIALS, THOSE FINISHES SHALL BE RESTORED TO PROVIDE ADEQUATE SUITABILITY, STRENGTH, AND SUBSTRATE FOR NEW CONSTRUCTION AND FINISHES.

7. CONTRACTOR SHALL COMPLY WITH THE FOLLOWING SECTIONS OF THE STANDARD SPECIFICATIONS FOR PUBLIC WORKS CONSTRUCTION:
   - 5-2 PROTECTION
   - 5-3 REMOVAL
   - 5-4 RELOCATION
   - 7-8 PROJECT SITE MAINTENANCE
   - 7-9 PROTECTION AND RESTORATION OF EXIST. IMPROVEMENTS
   - 7-10 PUBLIC CONVENIENCE AND SAFETY

8. SAFETY DURING CONSTRUCTION SHALL COMPLY WITH CHAPTER 33 C.B.C. AND CHAPTER 33 C.F.C.

9. THE CONTRACTOR SHALL DISPOSE OF DEMOLITION MATERIALS IN A LEGAL AND ACCEPTABLE MANNER.

10. CONTRACTOR SHALL MAKE AVAILABLE TO OWNER ANY MATERIALS OR EQUIPMENT LISTED FOR DEMOLITION, DISPOSAL. REMOVAL, ETC. UPON OWNERS REQUEST. OWNER SHALL HAVE FIRST RIGHT OF REFUSAL ON ALL SALVAGABLE ITEMS.

11. CONTRACTOR SHALL KEEP OPERATING EQUIPMENT OR MATERIALS INDICATED FOR REUSE, RELOCATION, OR OWNER RETENTION IN A SAFE MANNER TO PROTECT THE MATERIAL OR EQUIPMENT FROM DAMAGE.

12. THE CONTRACTOR IS RESPONSIBLE TO PERFORM ALL DEMOLITION WORK NECESSARY TO ALLOW EXECUTION OF ALL REQUIREMENTS OF THE NEW CONSTRUCTION UNDER THIS CONTRACT. CONTRACTOR SHALL BE RESPONSIBLE TO VERIFY ALL EXISTING CONDITIONS.

13. THE RECORD DRAWINGS FOR THE FACILITIES TO BE MODERNIZED MAY BE AVAILABLE FROM THE DISTRICT FOR REFERENCE. CONTRACTOR SHALL REQUEST DRAWINGS OR OTHER OWNER SUPPLIED DOCUMENTS PRIOR TO BEGINNING DEMOLITION OR CONSTRUCTION ACTIVIITES. THE CONTRACTOR SHALL REVIEW THE RECORD DOCUMENTS TO DETERMINE ANY CONDITIONS WHERE CONFLICTS, HARDSHIPS, OR SIMILIAR ISSUES MAY ARISE. THE CONTRACTOR SHALL NOTIFY THE ARCHTIECT OF ANY CONDITIONS WHERE CONFLICTS MAY ARISE PRIOR TO DEMOLITION OR CONSTRUCTION ACTIVITIES.

14. AREA OF FLOOR SLAB OR PAVING DEMOLITION IS SHOWN AS AN APPROXIMATION ONLY TO DEFINE GENERAL SCOPE OF WORK. EXISTING CONDITIONS MAY REQUIRE A LARGER / DIFFERENTLY CONFIGURED AREA OF DEMOLITION. REMOVAL SHALL BE IN ACCORDANCE TO THE NEEDS AND DESIGN INTENT OF THE NEW CONSTRUCTION. COORDINATE DEMOLITION REQUIREMENTS WITH CIVIL, STRUCTURAL, MECHANICAL, PLUMBING, AND ELECTRICAL DESIGN AND DRAWINGS.

15. ALL FLOOR SLAB AND/OR PAVING SAWCUTS SHALL BE DONE IN A MANNER THAT CREATES A SHARP, STRAIGHT, AND SQUARE EDGE. SAW CUT EDGES EXPOSED FOR LONG DURATIONS DURING CONSTRUCTION SHALL BE PROTECTED BY THE CONTRACTOR IN ORDER TO LIMIT CHIPPING OF CONCRETE EDGE. IF CHIPPING OR OTHER DAMAGE OCCURS, CONTRACTOR SHALL BE RESPONSIBLE FOR REMOVING AND REPLACING ADDITIONAL FLOOR SLAB AND/OR PAVING TO NEXT AVAILABLE JOINT OR AS DETERMINED BY ARCHITECT AT THE CONTRACTOR'S OWN COST.

16. WHERE EQUIPMENT AND/OR FIXTURES ARE INDICATED TO BE REMOVED ALL RELATED EXPOSED PIPING, CONDUITS, AND ASSOCIATED ITEMS SHALL ALSO BE REMOVED AND/OR PROPERLY TERMINATED TO PROVIDE COMPLETE DEMOLITION.

17. WHERE EXISTING CONSTRUCTION ELEMENTS (FRAMING, FINISHES, PIPES, CONDUITS, DUCTWORK, EQUIPMENT, ETC.) INTERFERE WITH THE INTENDED NEW CONSTRUCTION OR WOULD BE EXPOSED IN OTHERWISE 'FINISHED' AREAS, THESE ITEMS SHALL ALSO BE REMOVED AND/OR RELOCATED.

18. AT DEMOLITION OF DOORS, WINDOWS, FLASHINGS, SOFFITS, ETC. WHERE PLASTER IS DISTURBED AT FINISHES TO REMAIN, REMOVE PLASTER BACK 6" MINIMUM TO EXPOSE LATH TO PERFORM PROPER PLASTER PATCH.

19. REFER TO STRUCTURAL, MECHANICAL, PLUMBING, AND ELECTRICAL DRAWINGS FOR ALL DEMOLITION WORK SPECIFIC TO THOSE BUILDING SYSTEMS.

20. IT IS THE CONTRACTOR'S RESPONSIBILITY TO REQUEST ANY HAZARDOUS ABATEMENT DOCUMENTS FOR THE SCOPE OF WORK TO FULLY UNDERSTAND THE EXTENT OF REMOVAL AND DISPOSAL REQUIREMENTS FOR THOSE MATERIALS.

21. ALL ABATEMENT WORK SHALL BE COMPLETED BY THE CONTRACTOR PRIOR TO DEMOLITION WORK.

GENERAL ACCESIBILITY NOTES

1. EXIT DOORS SHALL BE OPENABLE FROM THE INSIDE WITHOUT THE USE OF A KEY OR SPECIAL KNOWLEDGE. HAND-ACTIVATED DOOR OPENING HARDWARE SHALL BE CENTERED BETWEEN 36" TO 42" ABOVE THE FLOOR (PANIC HARDWARE SHALL BE BETWEEN 36" TO 44" ABOVE FIN. FLR.). LATCHING AND LOCKING DOORS THAT ARE HAND ACTIVATED AND IN A PATH OF TRAVEL, SHALL BE OPENABLE WITH A SINGLE EFFORT BY LEVER-TYPE HARDWARE, BY EXIT DEVICE, OR PUSH-PULL ACTIVATING BARS. LOCKED EXIT DOORS SHALL OPERATE BY ABOVE IN DIRECTON OF EGRESS.

2. MAXIMUM EFFORT TO OPERATE DOORS SHALL NOT EXCEED 5.0 POUNDS FOR EXTERIOR AND INTERIOR DOORS, SUCH PUSH OR PULL EFFORT BEING APPLIED AT RIGHT ANGLES TO HINGED DOORS AND AT THE CENTER PLANE OF SLIDING OR FOLDING DOORS.

3. DOOR CLOSERS AND GATES CLOSERS SHALL BE ADJUSTED SO THAT FROM AN OPEN POSITION OF 90 DEGREES, THE TIME REQUIRED TO MOVE THE DOOR TO A POSITION OF 12 DEGREES FROM THE LATCH IS 5 SECONDS MINIMUM.

4. THE FLOOR OR LANDING SHALL NOT BE MORE THAN 1/2 INCH LOWER THAN THE THRESHOLD OF THE DOORWAY. CHANGE IN LEVEL BETWEEN 1/4 AND 1/2 INCH SHALL BE BEVELED WITH A SLOPE NO GREATER THAN 1 UNIT VERTICAL TO 2 UNITS HORIZONTAL.

5. ACCESSIBLE FIXTURES SHALL BE INSTALLED IN STRICT ACCORDANCE WITH CALIFORNIA PLUMBING CODE, 2019 EDITION.

6. EXPOSED LAVATORY P-TRAP ASSEMBLIES AND WATER SUPPLY LINES SHALL BE INSTALLED WITH REMANUFACTURED VINYL COVERED P-TRAP, VALVE, AND SUPPLY INSULATED COVER.

7. THE FORCE REQUIRED TO OPERATE LAVATORYOR SINK FAUCETS SHALL BE NO GREATER THAN 5 POUNDS, SELF-CLOSING FAUCETS SHALL HAVE A MINIMUM 10 SECOND CYCLE TIME.

8. ALL ACCESSIBLE GATES WITHIN THE PATH OF TRAVEL SHALL HAVE NON-GRIP HARDWARE MOUNTED BETWEEN 34" TO 44" ABOVE FINISH PAVING. THERE SHALL BE 24" MINIMUM CLEAR SPACE PROVIDED AT THE STRIKE SIDE OF THE GATE FOR ACCESSIBLE MANEUVERING CLEARANCES.

9. ALL DIMENSIONS FOR ACCESSIBLE COMPONENTS, FEATURES, OR CLEAR FLOOR SPACE ARE TO FACE OF FINISH UNLESS OTHERWISE NOTED.

10. WHERE FLOOR DRAINS ARE PROVIDED, FINISHED SURFACE SHALL SLOPE TO DRAIN NO MORE THAN 2% IN ANY DIRECTION. FLOOR DRAINS AND FLOOR SINKS SHALL HAVE 1/2" MAXIMUM GRATE OPENINGS IN ALL DIRECTION.

11. ACCESSIBLE PATH OF TRAVEL (POT) SHALL BE A BARRIER FREE ACCESS ROUTE WITHOUT ANY ABRUPT LEVEL CHANGES EXCEEDING 1/2" BEVELED 1:2 MAX SLOPE OR VERTICAL LEVEL CHANGES NOT EXCEEDING 1/4" MAX. POT SHALL BE AT LEAST 48" IN WIDTH WITH A STABLE, FIRM, AND SLIP RESISTANT SURFACE. CROSS SLOPE SHALL NOT EXCEED 2% MAX AND THE SLOPE IN THE DIRECTION OF TRAVEL SHALL NOT EXCEED 5%. POT SHALL BE MAINTAINED FREE OF OVERHANGING OBSTRUCTIONS TO 80" MINIMUM ABOVE FINISHED SURFACE AND PROTRUDING OBJECTS GREATER THAN 4" PROJECTION FROM THE WALL AND 27" ABOVE FINISHED SURFACE, BUT LESS THAN 80" ABOVE FINISHED SURFACE. REFERENCE CBC 11B-202.4.

12. OPENINGS IN GRATINGS OR STRAINERS LOCATED IN THE PEDESTRIAN CIRCULATION PATHS OR PATH OF TRAVEL SHALL NOT ALLOW PASSAGE OF A SPHERE MORE THAN 1/2" DIAMETER. ELONGATED OPENINGS SHALL BE PLACED SO THAT THE LONG DIMENSION IS PERPENDICULAR TO THE DOMINANT DIRECTION OF TRAVEL IN COMPLIANCE WITH CBC 11B-302.

13. GATES IN THE PATH OF TRAVEL SHALL COMPLY WITH EXIT DOOR REQUIREMENTS.

DESIGN PROFESSIONAL IN GENERAL RESPONSIBLE CHARGE STATEMENT

THE PATH OF TRAVEL (POT) IDENTIFIED IN THESE CONSTRUCTION DOCUMENTS IS COMPLIANT WITH THE CURRENT APPLICABLE CALIFORNIA BUILDING CODE ACCESSIBILITY PROVISIONS FOR PATH OF TRAVEL REQUIREMENTS FOR ALTERATIONS, ADDITIONS, AND STRUCTURAL REPAIRS AS PART OF THE DESIGN OF THIS PROJECT. THE POT WAS EXAMINED AND ANY ELEMENTS, COMPONENTS, OR PORTIONS OF THE POT THAT WERE DETERMINED TO BE NONCOMPLIANT HAVE BEEN IDENTIFIED AND, THE CORRECTIVE WORK NECESSARY TO BRING THEM INTO COMPLIANCE HAS BEEN INCLUDED WITHIN THE SCOPE OF THIS PROJECT THROUGH DETAILS, DRAWINGS, AND SPECIFICATIONS INCORPORATED INTO THESE CONSTRUCTION DOCUMENTS.

ANY NONCOMPLIANT ELEMENTS, COMPONENTS, OR PORTIONS OF THE POT THAT WILL NOT BE CORRECTED BY THIS PROJECT BASED ON VALUATION THRESHOLD LIMITATIONS OR A FINIDNG OF UNREASONABLE HARDSHIP ARE INDICATED IN THESE CONSTRUCTION DOCUMENTS. DURING CONSTRUCTION, IF POT ITEMS WITHIN THE SCOPE OF THE PROJECT REPRESENTED AS COMPLIANT ARE FOUND TO BE NON-CONFORMING BEYOND REASONABLE CONSTRUCTION TOLERANCES, THEY SHALL BE BROUGH INTO COMPLIANCE BY MEANS OF A CONSTRUCTION CHANGE CHANGE DOCUMENT (CCD).

LIST OF APPLICABLE CODES

2022 CALIFORNIA ADMINISTRATIVE CODE (C.A.C.), PART 1, TITLE 24, C.C.R.

2022 CALIFORNIA BUILDING CODE (C.B.C.) PART 2, TITLE 24, C.C.R.

2022 CALIFORNIA ELECTRIC CODE (C.E.C.), PART 3, TITLE 24, C.C.R.

2022 CALIFORNIA MECHANICAL CODE (C.M.C.) PART 4, TITLE 24, C.C.R.

2022 CALIFORNIA PLUMBING CODE (C.P.C.), PART 5, TITLE 24, C.C.R.

2022 CALIFORNIA ENERGY CODE, PART 6, TITLE 24, C.C.R.

2022 CALIFORNIA FIRE CODE (CFC), PART 9, TITLE 24, C.C.R.

2022 CALIFORNIA EXISTING GREEN BUILDING STANDARDS CODE (CALGREEN), PART 11, TITLE 24, C.C.R.

2022 CALIFORNIA REFERENCED STANDARDS CODE, PART 12, TITLE 24, C.C.R.

TITLE 19 C.C.R., PUBLIC SAFETY, STATE FIRE MARSHAL REGULATIONS

APPLICABLE STANDARDS

FOR A LIST OF APPLICABLE STANDARDS, INCLUDING CALIFORNIA AMENDMENTS TO THE NFPA STANDARDS, REFER TO CBC CHAPTER 35 AND CFC CHAPTER 80.

ALPHASTUDIO DESIGN GROUP

6152 INNOVATION WAY
CARLSBAD, 92009
760-431-2444
www.alphastudio-design.com

ARCHITECT OF RECORD

LICENSED ARCHITECT
PAUL R. GALLEGOS
No. C24063
EXP. 01/25
STATE OF CALIFORNIA

ENGINEER OF RECORD

CENTRAL KITCHEN IMPROVEMENTS
LAKESIDE UNION SCHOOL DISTRICT
12335 WOODSIDE AVE
LAKESIDE, CA 92040

LAKESIDE UNION SCHOOL DISTRICT
12335 WOODSIDE AVE LAKESIDE CA 92040

REVISIONS

MARK	DATE	DESCRIPTION

PROJECT NO: #PIn

MODEL FILE:
23-002 LUSD Central Kitchen Improvements_Draft_23-03-17.pln

PLOT DATE:
5/22/2023

SHEET TITLE

APPLICABLE CODES AND GENERAL NOTES

T-002

© 2020 Architects Gallegos + Eckle inc. dba AlphaStudio Design Group

T:\ASDG Projects\Active Projects\23-002 LUSD Central Kitchen Improvements\23-002 LUSD Central Kitchen Improvements_Draft_23-03-17.pln

CENTRAL KITCHEN IMPROVEMENTS

LAKESIDE UNION SCHOOL DISTRICT

ALPHASTUDIO DESIGN GROUP

6152 INNOVATION WAY
CARLSBAD, 92009
760-431-2444
www.alphastudio-design.com

ARCHITECT OF RECORD

LICENSED ARCHITECT
PAUL R. GALLEGOS
No. C24063
EXP. 01/25
STATE OF CALIFORNIA

ENGINEER OF RECORD

STANDARD ABBREVIATIONS

&	AND
<	ANGLE
@	AT
A	AMP
AB.	ANCHOR BOLT
ABV.	ABOVE
AC.	ASPAHLT
A/C.	AIR CONDITIONING
ACOUS.	ACOUSTICAL
AD.	AREA DRAIN
ADJ.	ADJUSTABLE
AGGR.	AGGREGATE
AFF.	ABOVE FINISH FLOOR
AL.	ALUMINUM
AP.	ACCESS PANEL
APPROX.	APPROXIMATE
ARCH.	ARCHITECTURAL
ASC.	ABOVE SUSPENDED CEILING
AS.	AUTOMATIC SPRINKLER
AUTO.	AUTOMATIC
BD	BOARD
BFG.	BELOW FINISH GRADE
BITUM.	BITUMINOUS
BLDG.	BUILDING
BLK.	BLOCK
BM.	BEAM
BRG.	BEARING
BRK.	BRICK
BOT.	BOTTOM
BTU.	BRITISH THERMAL UNIT
C.	CONDUIT
CAB.	CABINET
CB.	CATCH BASIN
CD.	CEILING DIFFUSER
CEM.	CEMENT
CER.	CERAMIC
CF.	CUBIC FEET
CFM.	CUBIC FEET PER MINUTE
CG.	CORNER GUARD
CI.	CAST IRON
CIP.	CAST IN PLACE
CKT. BKR.	CIRCUIT BREAKER
CL.	CENTERLINE
CLG.	CEILING
CLR.	CLEAR
CMU.	CONCRETE MASONRY UNIT
CNTR.	COUNTER
CO.	CLEANOUT
COTG.	CLEANOUT TO GRADE
COL.	COLUMN
CONC.	CONCRETE
CONN.	CONNECTION
CPT.	CARPET
CTR.	CENTER
CTSK.	COUNTERSINK
CW.	COLD WATER
D.	DRAIN
DBL.	DOUBLE
DEPT.	DEPARTMENT
DET.	DETAIL
DF.	DINKING FOUNTAIN
DIA.	DIAMETER
DIM.	DIMENSION
DISP.	DISPENSER
DMT.	DEMOUNTABLE
DN.	DOWN
DO.	DOOR OPENING
DR.	DRAIN
DS.	DOWNSPOUT
DWG.	DRAWING
DWR.	DRAWER
EXIST.	EXISTING
E.	EAST
EA.	EACH
EF.	EXHAUST FAN
EJ.	EXPANSION JOINT
ELEC.	ELECTRICAL
ELEV.	ELEVATOR
EMER.	EMERGENCY
ENCL.	ENCLOSURE
EP.	ELECTRICAL PANELBOARD
EQ.	EQUAL
EQUIP.	EQUIPMENT
EW.	EACH WAY
EWC.	ELECTRIC WATER COOLER
EH.	EXHAUST
EXIST.	EXISTING
EXPO.	EXPOSED
EXP.	EXPANSION
EXT.	EXTERIOR
FAS.	FASTNER
FA.	FIRE ALARM
FB.	FACE BRICK
FCO.	FLOOR CLEANOUT
FD.	FLOOR DRAIN
FDN.	FOUNDATION
FE.	FIRE EXTINGUISHER
FEC.	FIRE EXTINGUISHER CABINET
FF.	FINISH FLOOR
FG.	FINISH GRADE
FH.	FIRE HYDRANT
FHC.	FIRE HOUSE CABINET
FIN.	FINISH
FL.	FLOW LINE
FLR.	FLOOR
FLOUR.	FLOURESCENT
FOC.	FACE OF CONCRETE
FOF.	FACE OF FINISH
FOM.	FACE OF MASONRY
FOS.	FACE OF STUD
FPRF.	FIREPROOFING
FS	FINISH SURFACE
FT.	FOOT
FTG.	FOOTING
FUT.	FUTURE

GA.	GAUGE
GALV.	GALVANIZED
GB.	GRAB BAR
GC.	GENERAL CONTRACTOR
GL.	GLASS
GI.	GALVANIZED IRON
GND.	GROUND
GPDW.	GYPSUM DRYWALL
GRD.	GRADE
GV.	GATE VALVE
GYP.	GYPSUM
HB.	HOSE BIB
HC.	HOLLOW CORE
HD.	HEAD
HDR.	HEADER
HDW.	HARDWARE
HM.	HOLLOW METAL
HDWD.	HARDWARE
HNDRL.	HANDRAIL
HORIZ.	HORIZONTAL
HVAC.	HEATING, VENTILATING, AIR CONDITIONING
ID.	INSIDE DIAMETER
IE.	INVERT ELEVATION
IF.	INSIDE FACE
IN.	INCH
INC.	INCLUDE
INFO.	INFORMATION
INSUL.	INSULATION
INT.	INTERIOR
INV.	INVERT
JAN.	JANITOR
JST.	JOIST
JT.	JOINT
KIT.	KITCHEN
KP.	KICK PLATE
KVA	KILOVOLT AMPERES
KW	KILOWATT
MAS.	MASONRY
MAT'L.	MATERIAL
MAX.	MAXIMUM
MC.	MEDICINE CABINET
MECH.	MECHANICAL
MFR.	MANUFACTURER
MH.	MANHOLE
MIN.	MINIMUM
MIR.	MIRROR
MISC.	MISCELLANEOUS
MO.	MASONRY OPENING
MTD.	MOUNTED
MTL.	METAL
MUL.	MULLION
N.	NORTH
NIC.	NOT IN CONTRACT
NO.	NUMBER
NOM.	NOMINAL
NTS.	NOT TO SCALE
OA.	OUTSIDE AIR
O/A	OVERALL
OBS.	OBSCURE
OC.	ON CENTER
OD.	OUTSIDE DIAMETER
OFF.	OFFICE
OH.	OPPOSITE HAND
OPNG.	OPENING
OPP	OPPOSET
OVHD.	OVERHEAD
PAV.	PAVING
PC.	PRECAST CONCRETE
PCC.	PORTLAND CEMENT CONCRETE
PHP.	PARTIAL HEIGHT PARTITION
PLT.	PLATE
PL	PROPERTY LINE
PLAM	PLASTIC LAMINATE
PLAS.	PLASTER
PLYWD.	PLYWOOD
PLBG.	PLUMBING
POC.	POINT OF CONNECTION
PP.	POWER POLE
PRCST	PRE-CAST
PSI.	POUNDS PER SQUARE INCH
PT.	POINT
PTD.	PAPER TOWEL DISPENSER
PTN.	PARTITION
PVMT.	PAVEMENT
QT.	QUARRY TILE
R.	RISER
RAD.	RADIUS
RD.	ROOF DRAIN
REF.	REFERENCE
REFR.	REFRIGERATOR
REINF.	REINFORCED
REQ'D.	REQUIRED
REV.	REVISION
RESIL.	RESILIENT
RM.	ROOM
RO.	ROUGH OPENING
RDWD.	REDWOOD
S.	SOUTH
SC.	SOLID CORE
SCHED.	SCHEDULE
SD.	SOAP DISPENSER
SECT.	SECTION
SF.	SQUARE FOOT
SH.	SHELF
SHR.	SHOWER
SHT.	SHEET
SIM.	SIMILAR
SMH	SEWER MANHOLE
SND.	SANITARY NAPKIN DISPENSER
SOV.	SHUT OFF VALVE
SPEC.	SPECIFICATIONS
SPKR.	SPRINKLER
SQ.	SQUARE
SS.	STAINLESS STEEL
STA.	STATION

STD.	STANDARD
STL.	STEEL
ST.	STEEL
STO.	STORAGE
STRUC.	STRUCTURAL
STR.	STRUCTURAL
SUSP.	SUSPENDED
SYM.	SYMMETRICAL
T	TREAD
TB.	TOWEL BAR
T&B	TOP AND BOTTOM
TOC	TOP OF CURB
TEL.	TELEPHONE
TEM.	TEMPERED
TER.	TERAZZO
TF.	TOP OF FOOTING
T&G	TONGUE AND GROOVE
THK.	THICK
TP.	TOP OF PARAPET
TPD.	TOILET PAPER DISPENSER
TS	TOP OF STRUCTURE
TTB.	TELEPHONE TERMINAL BACKBOARD
TV.	TELEVISION
TOW.	TOP OF WALL
TYP.	TYPICAL
UG.	UNDERGROUND
UNF.	UNFINISHED
UNO	UNLESS NOTED OTHERWISE
UON	UNLESS OTHERWISE NOTED
UR	URINAL
UTIL.	UTILITY
VAR.	VARIES
VB.	VAPOR BARRIER
VCT.	VINYL COMPOSITION TILE
VERT.	VERTICAL
VEST.	VESTIBULE
VIF.	VERIFY IN FIELD
VTR.	VENT THROUGH ROOF
W	WEST
W/	WITH
WC.	WATER CLOSET
WCO.	WALL CLEAN OUT
WD.	WOOD
WDW.	WINDOW
WH.	WATER HEATER
W/O	WITHOUT
WP.	WATERPROOF
WSCT.	WAINSCOT
WT.	WEIGHT
WWF.	WELDED WIRE FABRIC
WWM.	WELDED WIRE MESH

ACOUSTIC TILE CEILING (ATC) IN SUSPENDED T-BAR CEILING GRID (2'X4')

GYPSUM BOARD CEILING (INTERIOR)
STUCCO SOFFIT (EXTERIOR)

SUSPENDED LIGHT FIXTURE IN ATC

LIGHT FIXTURE

AIR DIFFUSER (SUPPLY)

AIR DIFFUSER (RETURN)

FINISHED CEILING HEIGHT, WHERE HEIGHTS ARE NOT INDICTAED REFER TO FINISH SCHEDULE. — N'-N"

EXISTING WALL TO REMAIN

NEW WALL

EXISTING WALL TO BE DEMOLISHED

HATCH MAY VARY BASED ON RATING

RATED WALL (NEW OR EXISTING)

WINDOW (NEW OR EXISTING)

WINDOW TO BE DEMOLISHED

DOOR (NEW OR EXISTING)

DOOR TO BE DEMOLISHED

DIRECTION OF FLOW

ROOF DRAIN/OVERFLOW DRAIN

CRICKET

APPROXIMATE LOCATION OF PROTECTIVE ROOF WALKTOP

TYPICAL SYMBOLS

ROOM ELEVATION — X/1, X/2, X/3, X/4, A-X.X
- 'X' INDICATES CORRESPONDING ELEVATION REFERENCE
- NUMBER REFERENCES FINISH SCHEDULE ELEVATION
- CORRESPONDING SHEET NUMBER OF ELEVATION

DETAIL REFERENCE — N, A-X.X
- DETAIL NUMBER
- CORRESPONDING SHEET NUMBER OF DETAIL

EXTERIOR ELEVATION MARKER — N, A-X.X
- EXTERIOR ELEVATION NUMBER
- CORRESPONDING SHEET NUMBER OF ELEVATION

SECTION MARKER — A, A-X.X
- ORIENTATION OF SECTION CUT
- BUILDING SECTION LETTER
- CORRESPONDING SHEET NUMBER OF SECTION

DOOR IDENTIFICATION — N, D000
- CORRESPONDING ROOM NUMBER
- DOOR NUMBER

WINDOW IDENTIFICATION — 000
- WINDOW NUMBER

REVISION — N
- REVISION NUMBER

KEYNOTE — N, TYP.
- KEYNOTE NUMBER
- TYPICAL WHERE NOTED. TYPICAL ITEMS WILL NOT BE NOTED AT ALL LOCATION.

ROOM NAME/NUMBER MARKER — ROOM NAME, ROOM NUMBER

EXISTING ACCESSIBLE PATH OF TRAVEL (POT)

NEW ACCESSIBLE PATH OF TRAVEL (POT) — 0.00
- ARCHITECTURAL SPOT ELEVATION (WHERE OCCURS)

60" DIAMETER ACCESSIBLE CLEAR SPACE

30"X48" ACCESSIBLE CLEAR SPACE

TYPICAL CABINET DESIGNATION (BASE, FULL, OVERHEAD)

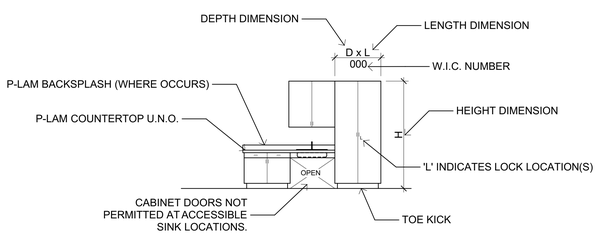

CENTRAL KITCHEN IMPROVEMENTS
LAKESIDE UNION SCHOOL DISTRICT
12335 WOODSIDE AVE
LAKESIDE, CA 92040

LAKESIDE UNION SCHOOL DISTRICT
12335 WOODSIDE AVE LAKESIDE CA 92040

REVISIONS

MARK	DATE	DESCRIPTION

PROJECT NO: #PIn

MODEL FILE:
23-002 LUSD Central Kitchen Improvements_Draft_23-03-17.pln

PLOT DATE:
5/22/2023

SHEET TITLE

ABBREVIATIONS AND TYPICAL SYMBOLS

T-003

© 2020 Architects Gallegos + Eckle inc. dba AlphaStudio Design Group

T:\ASDG Projects\Active Projects\23-002 LUSD Central Kitchen Improvements\23-002 LUSD Central Kitchen Improvements_Draft_23-03-17.pln

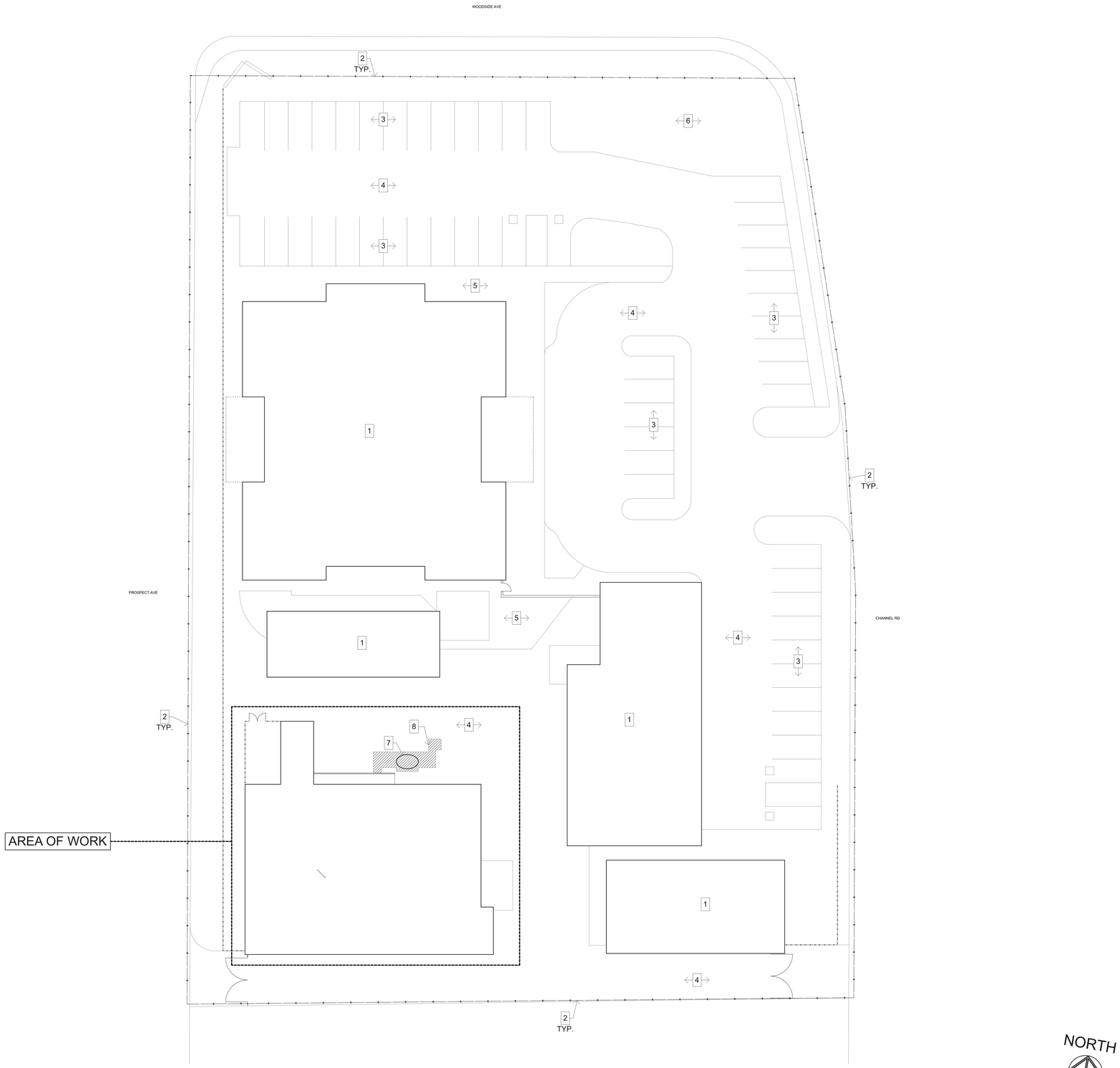

1 OVERALL SITE PLAN
SCALE: 1/16" = 1'-0"

NOTES

1. EXISTING BUILDING TO REMAIN
2. EXISTING PROPERTY LINE TO REMAIN.
3. EXISTING PARKING TO REMAIN.
4. EXISTING ASPHALT TO REMAIN.
5. EXISTING CONCRETE TO REMAIN.
6. EXISTING LANDSCAPE TO REMAIN.
7. NEW GREASE INTERCEPTOR PER PLUMBING DRAWINGS.
8. HATCHING INDICATES APPROXIMATE LOCATION OF TRENCH PATCHING. FINISH SURFACE TO MATCH ADJACENT SURFACE. REFER TO DETAILS 1 & 2/A-110 .

GENERAL NOTES

1. ALL LANDSCAPE AREAS, PAVING, AND SURFACING DISTURBED BY THE WORK OF THIS CONTRACT SHALL BE REPAIRED AND/OR REPLACED BY THE CONTRACTOR TO ORIGINAL INDUSTRY STANDARD OF QUALITY.
2. PRIOR TO CONSTRUCTION, CONTRACTOR SHALL VERIFY LOCATION OF ALL EXISTING UTILITIES, INCLUDING BUT NOT LIMITED TO ELECTRICAL, SIGNAL, PLUMBING, ETC. THE CONTRACTOR SHALL PROTECT AND MAINTAIN EXISTING UTILITIES DURING CONSTRUCTION AND/OR TRENCHING.

ALPHASTUDIO DESIGN GROUP

6152 INNOVATION WAY
CARLSBAD, 92009
760-431-2444
www.alphastudio-design.com

ARCHITECT OF RECORD

LICENSED ARCHITECT
PAUL R. GALLEGOS
No. C24063
EXP. 01/25
STATE OF CALIFORNIA

ENGINEER OF RECORD

CENTRAL KITCHEN IMPROVEMENTS

LAKESIDE UNION SCHOOL DISTRICT

12335 WOODSIDE AVE
LAKESIDE, CA 92040

LAKESIDE UNION SCHOOL DISTRICT
12335 WOODSIDE AVE LAKESIDE CA 92040

REVISIONS

MARK	DATE	DESCRIPTION

PROJECT NO: #PIn

MODEL FILE:
23-002 LUSD Central Kitchen Improvements_Draft_23-03-17.pln

PLOT DATE:
5/22/2023

SHEET TITLE

OVERALL SITE PLAN

A-101

© 2020 Architects Gallegos + Eckle inc. dba AlphaStudio Design Group

T:\ASDG Projects\Active Projects\23-002 LUSD Central Kitchen Improvements\23-002 LUSD Central Kitchen Improvements_Draft_23-03-17.pln

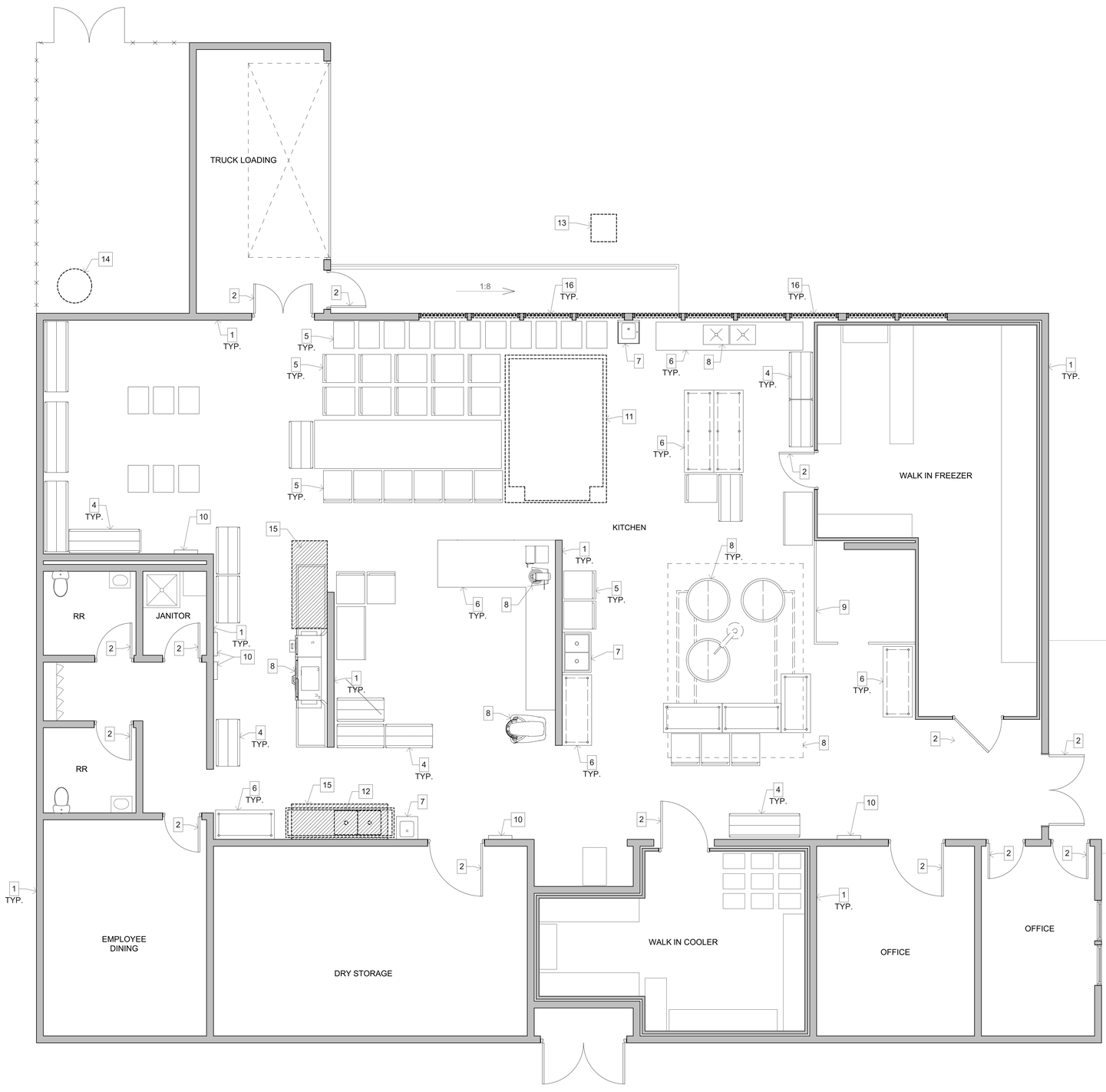

1 DEMOLITION FLOOR PLAN
SCALE: 1/4" = 1'-0"

NOTES

1. EXISTING WALL TO REMAIN.
2. EXISTING DOOR TO REMAIN.
3. EXISTING WINDOW TO REMAIN.
4. EXISTING STORAGE RACK TO REMAIN.
5. EXISTING TRANSPORT CART TO REMAIN.
6. EXISTING COUNTERTOP TO REMAIN.
7. EXISTING SINK TO REMAIN.
8. EXISTING EQUIPMENT TO REMAIN.
9. EXISTING PARTITION TO REMAIN.
10. EXISTING ELECTRICAL PANEL TO REMAIN.
11. DEMO AND REMOVE EXISTING EQUIPMENT.
12. DEMO AND REMOVE EXISTING COMPARTMENT SINK.
13. DEMO AND REMOVE EXISTING GREASE INTERCEPTOR.
14. DEMO AND REMOVE EXISTING WATER HEATER.
15. DEMO AND REMOVE PORTION OF EXISTING CONCRETE SLAB AS INDICATED BY HATCHED AREA. FOR IMPROVEMENTS - REFER TO NEW WORK FLOOR PLAN SHEET A-103 .
16. REMOVE EXISTING WINDOW FOR THE INSTALLATION OF NEW FIXED DUAL-PANE INSULATED GLASS WINDOW. REFER TO NEW WORK FLOOR PLAN SHEET A-103 .

ALPHASTUDIO DESIGN GROUP

6152 INNOVATION WAY
CARLSBAD, 92009
760-431-2444
www.alphastudio-design.com

ARCHITECT OF RECORD

LICENSED ARCHITECT
PAUL R. GALLEGOS
No. C24063
EXP. 01/25
STATE OF CALIFORNIA

ENGINEER OF RECORD

CENTRAL KITCHEN IMPROVEMENTS

LAKESIDE UNION SCHOOL DISTRICT

12335 WOODSIDE AVE
LAKESIDE, CA 92040

LAKESIDE UNION SCHOOL DISTRICT
12335 WOODSIDE AVE LAKESIDE CA 92040

REVISIONS

MARK	DATE	DESCRIPTION

PROJECT NO: #PIn

MODEL FILE:
23-002 LUSD Central Kitchen Improvements_Draft_23-03-17.pln

PLOT DATE:
5/22/2023

SHEET TITLE

DEMOLITION FLOOR PLAN

A-102

© 2020 Architects Gallegos + Eckle inc. dba AlphaStudio Design Group

T:\ASDG Projects\Active Projects\23-002 LUSD Central Kitchen Improvements\23-002 LUSD Central Kitchen Improvements_Draft_23-03-17.pln

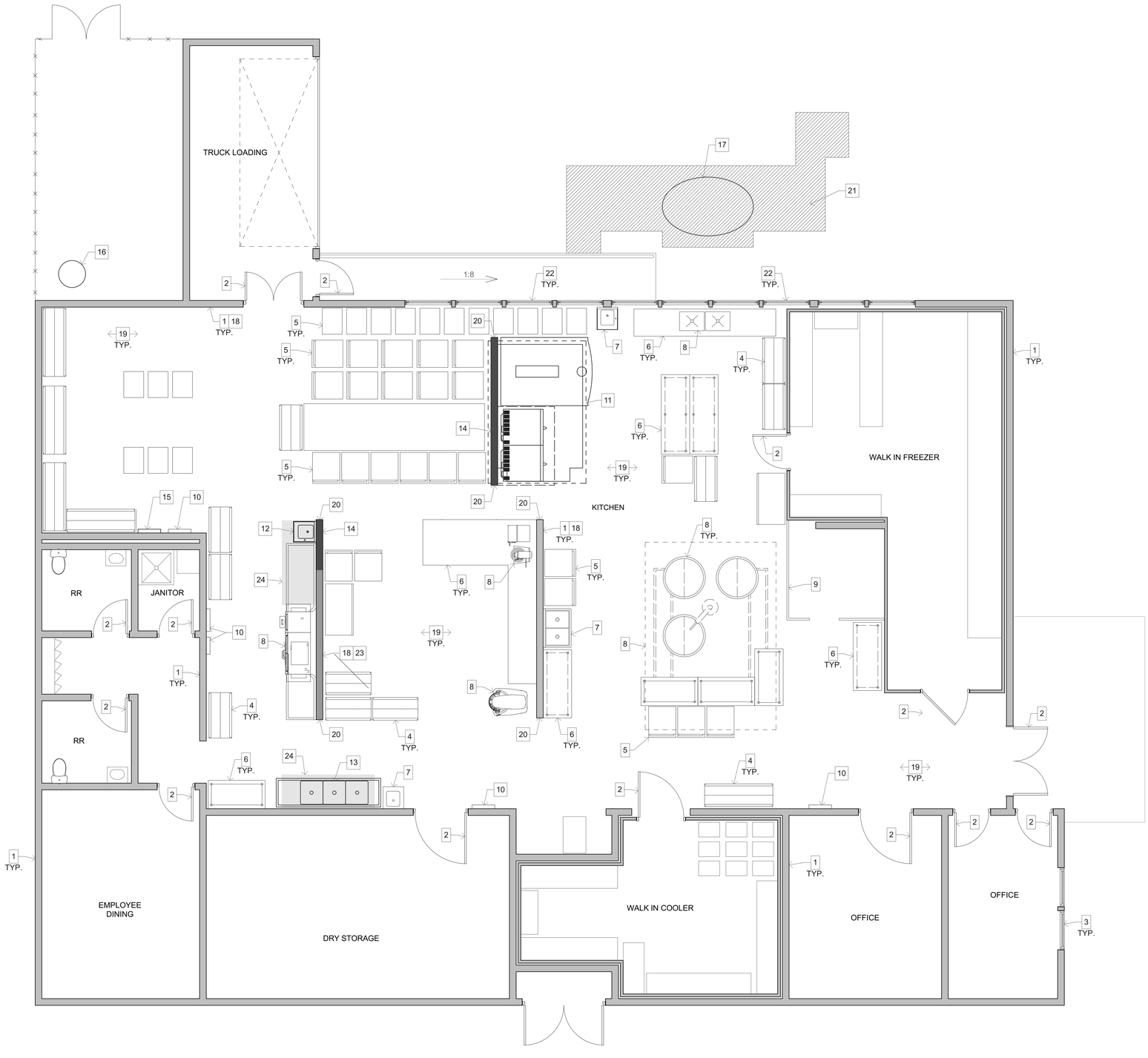

1 NEW WORK FLOOR PLAN
SCALE: 1/4" = 1'-0"

NOTES

1. EXISTING WALL TO REMAIN.
2. EXISTING DOOR TO REMAIN.
3. EXISTING WINDOW TO REMAIN.
4. EXISTING STORAGE RACK TO REMAIN.
5. EXISTING TRANSPORT CART TO REMAIN.
6. EXISTING COUNTERTOP TO REMAIN.
7. EXISTING SINK TO REMAIN.
8. EXISTING EQUIPMENT TO REMAIN.
9. EXISTING PARTITION TO REMAIN.
10. EXISTING ELECTRICAL PANEL TO REMAIN.
11. NEW EQUIPMENT PER FOOD SERVICE DRAWINGS.
12. NEW HAND SINK.
13. NEW 3 COMPARTMENT SINK.
14. NEW FULL HEIGHT PARTITION PER DETAILS 6 & 7/A-110 .
15. NEW ELECTRICAL PANEL PER ELECTRICAL DRAWINGS.
16. NEW WATER HEATER PER PLUMBING DRAWINGS.
17. NEW GREASE INTERCEPTOR PER PLUMBING DRAWINGS.
18. PAINT WALL PER FINISH SCHEDULE.
19. SAND AND POLISH EXISTING CONCRETE FLOOR.
20. NEW CORNER GUARD PER SPECIFICATIONS.
21. HATCHING INDICATES APPROXIMATE LOCATION OF TRENCH PATCHING. FINISH SURFACE TO MATCH ADJACENT SURFACE. REFER TO DETAILS 1 & 2/A-110 .
22. INSTALLATION OF NEW FIXED DUAL-PANE INSULATED GLASS WINDOW. REFER TO SPECIFICATIONS.
23. EXTEND EXISTING 5'-0" HIGH WALL TO FULL HEIGHT PER DETAILS 6 & 7/A-110 .
24. SHADING INDICATES CONCRETE SLAB REPAIR PER DETAIL 3/A-110 .

ALPHASTUDIO DESIGN GROUP

6152 INNOVATION WAY
CARLSBAD, 92009
760-431-2444
www.alphastudio-design.com

ARCHITECT OF RECORD

LICENSED ARCHITECT
PAUL R. GALLEGOS
No. C24063
EXP. 01/25
STATE OF CALIFORNIA

ENGINEER OF RECORD

CENTRAL KITCHEN IMPROVEMENTS

LAKESIDE UNION SCHOOL DISTRICT

12335 WOODSIDE AVE
LAKESIDE, CA 92040

LAKESIDE UNION SCHOOL DISTRICT
12335 WOODSIDE AVE LAKESIDE CA 92040

REVISIONS

MARK	DATE	DESCRIPTION

PROJECT NO: #PIn

MODEL FILE:
23-002 LUSD Central Kitchen Improvements_Draft_23-03-17.pln

PLOT DATE:
5/22/2023

SHEET TITLE

NEW WORK FLOOR PLAN

A-103

© 2020 Architects Gallegos + Eckle inc. dba AlphaStudio Design Group

T:\ASDG Projects\Active Projects\23-002 LUSD Central Kitchen Improvements\23-002 LUSD Central Kitchen Improvements_Draft_23-03-17.pln

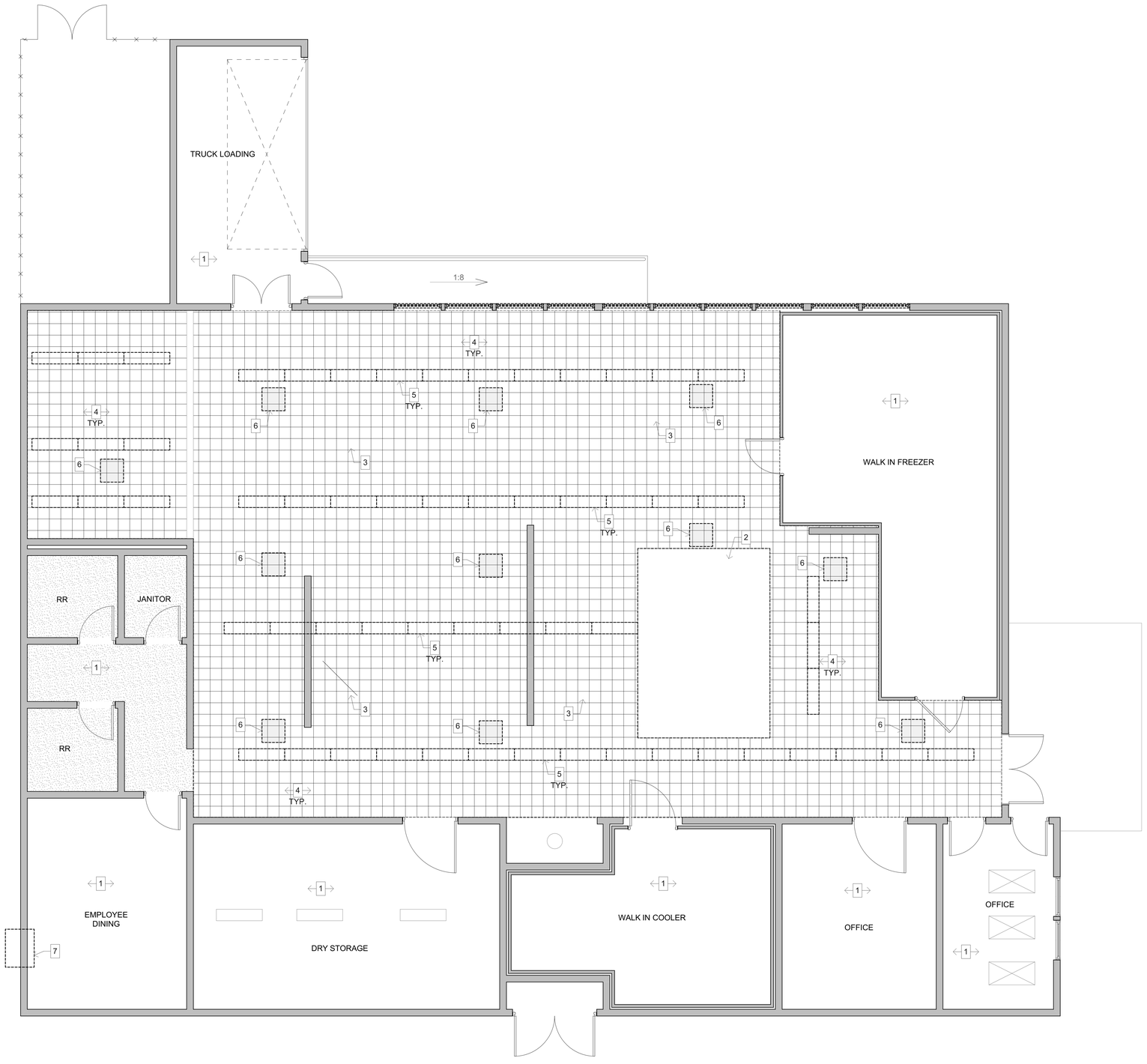

1 DEMO REFLECTED CEILING PLAN

SCALE: 1/4" = 1'-0"

NOTES

1. EXISTING CEILING TO REMAIN.
2. EXISTING HOOD TO REMAIN.
3. EXISTING MECHANICAL DIFFUSER TO REMAIN.
4. DEMO AND REMOVE EXISTING ACOUSTICAL CEILING TILES AND DROPPED CEILING. REFER TO NEW WORK SHEET A-105 .
5. DEMO AND REMOVE LIGHTING. REFER TO ELECTRICAL DRAWINGS & NEW WORK SHEET A-105 .
6. DEMO AND REMOVE EXISTING MECHANICAL DIFFUSER.
7. DEMO AND REMOVE EXISTING WALL AC UNIT.

ALPHASTUDIO DESIGN GROUP

6152 INNOVATION WAY
CARLSBAD, 92009
760-431-2444
www.alphastudio-design.com

ARCHITECT OF RECORD

LICENSED ARCHITECT
PAUL R. GALLEGOS
No. C24063
EXP. 01/25
STATE OF CALIFORNIA

ENGINEER OF RECORD

CENTRAL KITCHEN IMPROVEMENTS

LAKESIDE UNION SCHOOL DISTRICT

12335 WOODSIDE AVE
LAKESIDE, CA 92040

LAKESIDE UNION SCHOOL DISTRICT
12335 WOODSIDE AVE LAKESIDE CA 92040

REVISIONS

MARK	DATE	DESCRIPTION

PROJECT NO: #PIn

MODEL FILE:
23-002 LUSD Central Kitchen Improvements_Draft_23-03-17.pln

PLOT DATE:
5/22/2023

SHEET TITLE

DEMOLITION REFLECTED CEILING PLAN

A-104

© 2020 Architects Gallegos + Eckle inc. dba AlphaStudio Design Group

T:\ASDG Projects\Active Projects\23-002 LUSD Central Kitchen Improvements\23-002 LUSD Central Kitchen Improvements_Draft_23-03-17.pln

1 NEW WORK REFLECTED CEILING PLAN
SCALE: 1/4" = 1'-0"

NOTES

1. EXISTING CEILING TO REMAIN.
2. EXISTING HOOD TO REMAIN.
3. EXISTING MECHANICAL DIFFUSERS TO REMAIN.
4. NEW 2X4 ACOUSTICAL CEILING TILES IN SUSPENDED T-BAR GRID. REFER TO SHEETS A-106 & A-107 FOR DETAILS.
5. NEW LIGHTING - REFER TO ELECTRICAL DRAWINGS AND SPECIFICATIONS.
6. NEW MECHANICAL DIFFUSER PER MECHANICAL DRAWINGS.
7. NEW HOOD PER FOOD SERVICE DRAWINGS.

ALPHASTUDIO DESIGN GROUP

6152 INNOVATION WAY
CARLSBAD, 92009
760-431-2444
www.alphastudio-design.com

ARCHITECT OF RECORD

LICENSED ARCHITECT
PAUL R. GALLEGOS
No. C24063
EXP. 01/25
STATE OF CALIFORNIA

ENGINEER OF RECORD

CENTRAL KITCHEN IMPROVEMENTS

LAKESIDE UNION SCHOOL DISTRICT

12335 WOODSIDE AVE
LAKESIDE, CA 92040

LAKESIDE UNION SCHOOL DISTRICT
12335 WOODSIDE AVE LAKESIDE CA 92040

REVISIONS

MARK	DATE	DESCRIPTION

PROJECT NO: #PIn

MODEL FILE:
23-002 LUSD Central Kitchen Improvements_Draft_23-03-17.pln

PLOT DATE:
5/22/2023

SHEET TITLE

NEW WORK REFLECTED CEILING PLAN

A-105

© 2020 Architects Gallegos + Eckle inc. dba AlphaStudio Design Group

T:\ASDG Projects\Active Projects\23-002 LUSD Central Kitchen Improvements\23-002 LUSD Central Kitchen Improvements_Draft_23-03-17.pln

1. CEILING SYSTEM GENERAL NOTES

1.01 Ceiling system components shall comply with ASTM C635 and Section 5.1 of ASTM E580.

1.02 The ceiling grid system must be rated heavy duty as defined by ASTM C635.

1.03 Ceiling systems. The following ceiling system(s) is/are part of the scope of this project:

Manufacturer:	ARMSTRONG WORLD INDUSTRIES, INC.
Product Name:	PRELUDE AND PLUS SYSTEMS
Evaluation Report Type and Number:	ICC-ES ESR 1308
Main Runner Part, Model, or Catalog Number:	ARMSTRONG PRELUDE XL 15/16" ITEM NO. 7301
Cross Runner Part, Model, Catalog Number:	ARMSTRONG PRELUDE XL 15/16" ITEM NO. 7341

1.05 Ceiling panels shall not support any luminaires, air terminals or devices.

1.06 For ceiling installations utilizing acoustical tile panels of mineral or glass fiber, it is not mandatory to provide ¾" clearance between the acoustical tile panels and the wall on the sides of the ceiling which are free to slip. For all other ceiling panel types, provide ¾" clearance between the ceiling panel and the wall on the sides of the ceiling free to slip. Clearance between ceiling grid runners/members and walls shall comply with the details on these drawings regardless of ceiling tile material.

2. MATERIALS

2.01 Ceiling wire shall be Class 1 zinc coated (galvanized) carbon steel conforming to ASTM A641. Wire shall be #12 gauge (0.106" diameter) with soft temper and minimum ultimate tensile strength = 70 ksi.

2.02 Galvanized sheet steel (including that used for metal stud and track compression struts/post) shall conform to ASTM A653, or other equivalent sheet steel listed in Section A3.1 of the North American Specification for the Design of Cold-Formed Steel Structural Members, (AISI S100). Material 43 mil (18 gauge) and lighter shall have minimum yield strength of 33 ksi. Material 54 mil (16 gauge) and heavier shall have a minimum yield strength of 50 ksi.

2.03 Electrical metallic tube (EMT) shall be ANSI C80.3/UL 797 carbon steel with G90 galvanizing. EMT shall have minimum yield strength (F_Y) of 30 ksi and minimum ultimate strength (F_U) of 48 ksi.

3. ATTACHMENT OF HANGER AND BRACING WIRES

3.01 Separate all ceiling hanger and bracing wires at least 6 inches from all unbraced ducts, pipes, conduit, etc.

3.02 Hanger and bracing wires shall not attach to or bend around obstructions including but not limited to piping, ductwork, conduit and equipment.

Detail Title:	REV: 09/21/2015	Detail No.
CEILING NOTES	REV: 03/2022	1.00

3.03 Hanger wires that are more than one (horizontal) in six (vertical) out of plumb shall have counter-sloping wires.

3.04 Slack safety wires shall be considered hanger wires for installation and testing requirements.

3.05 Hanger and bracing wire anchorage to the structure shall be installed in such a manner that the direction of the anchorage aligns closely with the direction of the wire (e.g., bracing wire ceiling clips must be bent as shown in the details and rotated as required to align closely with the direction of the wire, screw eyes in wood must be installed so they align closely with the direction of the wire, etc.).

4. FASTENERS AND WELDING

4.01 Sheet metal screws shall comply with ASTM C1513 and ASME B18.6.3. Penetration of screws through joined material shall not be less than three exposed threads.

4.02 Expansion anchors shall be: ***N/A***

4.03 Power-Actuated Fasteners shall be: ***N/A***

4.04 If not otherwise specified in the evaluation report, power-actuated fasteners installed in steel shall be installed so the entire pointed end of the fastener is driven through the steel member

4.05 Power-actuated fasteners in concrete or masonry are not permitted for bracing wires.

4.06 Concrete reinforcement and prestressing tendons shall be located by non-destructive means prior to installing post-installed anchors.

4.07 Welding shall be in accordance with AWS D1.3 using E60XX series electrodes.

5. TESTING

5.01 All field testing must be performed in the presence of the project inspector.

5.02 Post-installed anchors in concrete used to support hanger wires shall be tested at a frequency of 10 percent. Power-actuated fasteners in concrete shall be field tested for 200 pounds in tension. All other post-installed anchors in concrete shall be tested in accordance with CBC Section 1910A.5

5.03 Post-installed anchors in concrete used to attach bracing wires shall be tested at a frequency of 50 percent in accordance with CBC Section 1910A.5

6. LUMINAIRES

6.01 All luminaires shall be positively attached to the ceiling suspension systems by mechanical means to resist a horizontal force equal to the weight of the luminaire. A minimum of two screws or approved fasteners are required at each luminaire, per ASTM E580 Section 5.3.1.

6.02 Surface-mounted luminaires shall be attached to the main runner with at least two positive clamping devices. The clamping device shall completely surround the supporting

Detail Title:	REV: 09/21/2015	Detail No.
CEILING NOTES	REV: 03/2022	1.00

ceiling runner and be made of steel with a minimum thickness of #14 gauge. Rotational spring catches do not comply. A #12 gauge slack safety wire shall be connected from each clamping device to the structure above. Provide additional supports when a luminaire is 8 feet or longer or exceeds 56 pounds. Maximum spacing between supports shall not exceed 8 feet.

6.03 Luminaires weighing less than or equal to 10 pounds may be supported directly on the ceiling runners, shall have a minimum of one #12 gauge slack safety wire connected from the fixture housing to the structure above.

6.04 Luminaires weighing greater than 10 pounds but less than or equal to 56 pounds may be supported directly on the ceiling runners, but they shall have a minimum of two #12 gauge slack safety wires connected from the fixture housing at diagonal corners to the structure above.

Exception: All luminaires greater than two by four feet weighing less than 56 pounds shall have a #12 gauge slack safety wire at each corner.

6.05 All luminaires weighing greater than 56 pounds shall be independently supported by not less than four taut #12 gauge hanger wires (one at each corner) attached from the fixture housing to the structure above or other approved hangers. The four taut #12 gauge wires or other approved hangers, including their attachment to the structure above, shall be capable of supporting four times the weight of the fixture.

7. SERVICES WITHIN THE CEILING

7.01 All flexible sprinkler hose fitting mounting brackets, ceiling-mounted air terminals or other services shall be positively attached to the ceiling suspension systems by mechanical means. Screws or approved fasteners are required. A minimum of two attachments are required at each component.

7.02 Ceiling-mounted air terminals or other services weighing less than or equal to 20 pounds shall have one #12 gauge slack safety wire attached from the terminal or service to the structure above.

7.03 Flexible sprinkler hose fittings, ceiling-mounted air terminals or other services weighing more than 20 pounds but less than or equal to 56 pounds shall have two #12 gauge slack safety wires (at diagonal corners) connected from the terminal or service to the structure above.

7.04 Flexible sprinkler hose fittings, ceiling-mounted air terminals or other services weighing more than 56 pounds shall be supported directly from the structure above by not less than four taut #12 gauge hanger wires attached from the terminal or service to the structure above or other approved hangers.

8. OTHER DEVICES WITHIN THE CEILING

8.01 All lightweight miscellaneous devices, such as strobe lights, occupancy sensors, speakers, exit signs, etc., shall be attached to the ceiling grid. In addition, devices weighing more than 10 pounds shall have a #12 gauge slack safety wire anchored to the structure above. Devices weighing more than 20 pounds shall be supported independently from the structure above.

Detail Title:	REV: 09/21/2015	Detail No.
CEILING NOTES	REV: 03/2022	1.00

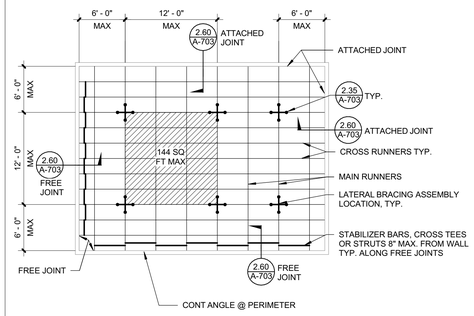

NOTE:
BRACING WIRES AND COMP. STRUT SHALL OCCUR AT EVERY 144 SQ. FT. MAX. IN ROOMS OVER 144 SQ. FT.

Detail Title :	REV: 09/21/2015	Detail No.
TYP. CEILING PLAN FOR 12'-0"x12'-0" BRACE ASSEMBLY SPACING	REV: 03/2022	2.12

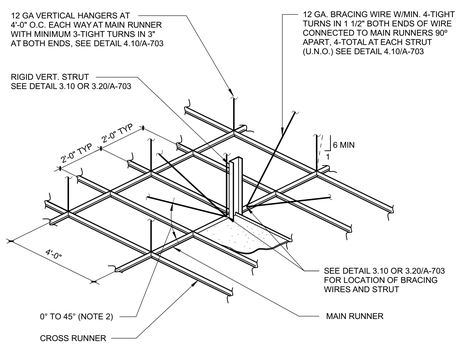

NOTES:
1. STRUTS SHALL NOT REPLACE HANGER WIRES.
2. THE MINIMUM ACCEPTABLE ANGLE IS DETERMINED SUCH THAT THE WIRES DO NOT INTERFERE WITH THE RUNNERS, LIGHT FIXTURES, ETC. AND REMAIN STRAIGHT AND UNOBSTRUCTED.

Detail Title :	REV: 09/21/2015	Detail No.
SUSPENSION AND LATERAL BRACING ASSEMBLY	REV: 03/10/2017	2.35
	REV: 03/2022	

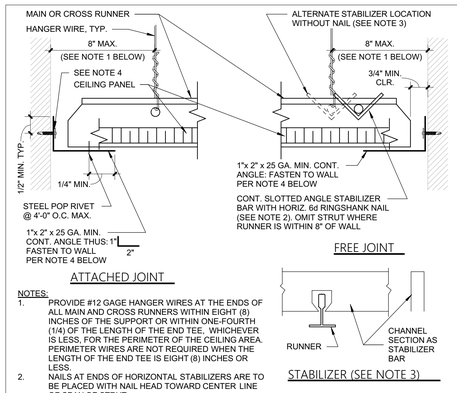

NOTES:
1. PROVIDE #12 GAGE HANGER WIRES AT THE ENDS OF ALL MAIN AND CROSS RUNNERS WITHIN EIGHT (8) INCHES OF THE SUPPORT OR WITHIN ONE-FOURTH (1/4) OF THE LENGTH OF THE END TEE, WHICHEVER IS LESS, FOR THE PERIMETER OF THE CEILING AREA. PERIMETER WIRES ARE NOT REQUIRED WHEN THE LENGTH OF THE END TEE IS EIGHT (8) INCHES OR LESS.
2. NAILS AT ENDS OF HORIZONTAL STABILIZERS ARE TO BE PLACED WITH NAIL HEAD TOWARD CENTER LINE OF SPAN OF STRUT.
3. STABILIZER BAR MAY BE SLOTTED APPROVED ANGLES OR CHANNELS WITH "DIAMOND POINTS" OF SPRING STEEL WHICH SNAP TIGHT TO PREVENT MOVEMENT OF STRUT.
4. FASTEN ANGLE TO WALL STUD OR BLOCKING AS FOLLOWS:
   A. METAL STUD (20 GA. MIN.) WALL: (1) #10 SMS AT 24" O.C. MAX.
   B. WOOD STUD WALL: #10x2" LONG WOOD SCREW AT 16" O.C. MAX.

Detail Title :	REV: 09/21/2015	Detail No.
CEILING PERIMETER	REV: 03/10/2017	2.60
	REV: 03/2022	

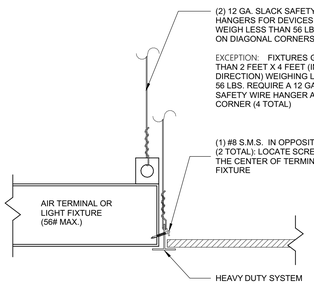

Detail Title :	REV: 09/21/2015	Detail No.
LUMINAIRE / AIR TERMINAL SUPPORT	REV: 02/10/2016	2.80
	REV: 03/2022	

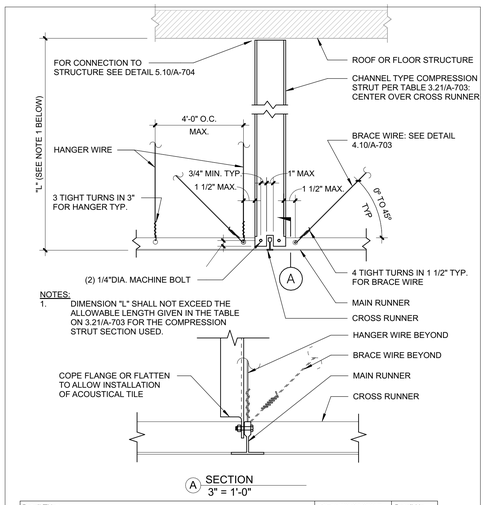

NOTES:
1. DIMENSION "L" SHALL NOT EXCEED THE ALLOWABLE LENGTH GIVEN IN THE TABLE ON 3.21/A-703 FOR THE COMPRESSION STRUT SECTION USED.

Detail Title :	REV: 09/21/2015	Detail No.
COMPRESSION STRUT - CHANNEL TYPE	REV: 03/2022	3.10

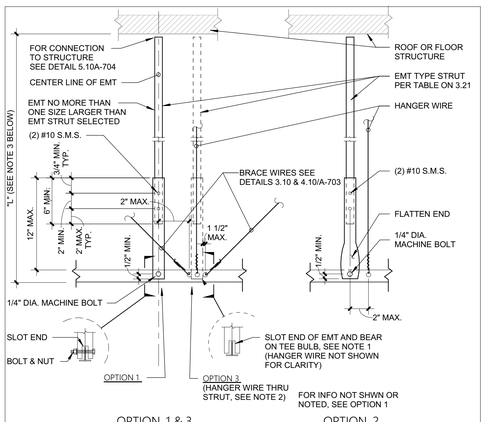

NOTES:
1. MACHINE BOLT IS NOT REQUIRED ON OPTION 3.
2. OPTION 3 IS PERMITTED ONLY WHERE THE ROOF OR FLOOR STRUCTURE IS SAWN TIMBER WITHOUT GYPSUM BOARD.
3. DIMENSION "L" SHALL NOT TO EXCEED THE ALLOWABLE LENGTH GIVEN IN THE TABLE ON 3.21/A-703 FOR THE COMPRESSION STRUT USED

Detail Title :	REV: 09/21/2015	Detail No.
COMPRESSION STRUT - EMT TYPE	REV: 03/2022	3.20

COMPRESSION STRUT EMT SECTION	MAXIMUM LENGTH
1/2" DIAMETER EMT (0.042" WALL THICKNESS)	3' - 11"
3/4" DIAMETER EMT (0.049" WALL THICKNESS)	6' - 4"
1" DIAMETER EMT (0.057" WALL THICKNESS)	9' - 9"
1 1/4" DIAMETER EMT (0.065" WALL THICKNESS)	12' - 9"
1 1/2" DIAMETER EMT (0.065" WALL THICKNESS)	14' - 9"
2" DIAMETER EMT (0.065" WALL THICKNESS)	18' - 10"

COMPRESSION STRUT CHANNEL SECTION	MAXIMUM LENGTH
250S125-33	5' - 10"
250S137-33	6' - 10"
362S137-33	8' - 0"
250S137-43	8' - 10"
400S137-43	10' - 10"

Detail Title :	REV: 09/21/2015	Detail No.
COMPRESSION STRUT TABLE	REV: 03/10/2017	3.21
	REV: 03/2022	

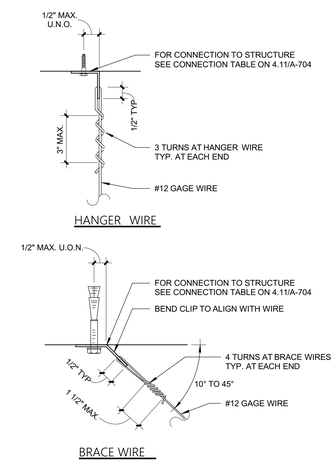

Detail Title :	REV: 09/21/2015	Detail No.
HANGER AND BRACE WIRE CONNECTION - TYP. WIRE TURNS	REV: 03/2022	4.10

ALPHASTUDIO DESIGN GROUP
6152 INNOVATION WAY
CARLSBAD, 92009
760-431-2444
www.alphastudio-design.com

ARCHITECT OF RECORD

LICENSED ARCHITECT
PAUL R. GALLEGOS
No. C24063
EXP. 01/25
STATE OF CALIFORNIA

ENGINEER OF RECORD

CENTRAL KITCHEN IMPROVEMENTS

LAKESIDE UNION SCHOOL DISTRICT

12335 WOODSIDE AVE
LAKESIDE, CA 92040

LAKESIDE UNION SCHOOL DISTRICT
12335 WOODSIDE AVE LAKESIDE CA 92040

REVISIONS

MARK	DATE	DESCRIPTION

PROJECT NO: #PIn

MODEL FILE:
23-002 LUSD Central Kitchen Improvements_Draft_23-03-17.pln

PLOT DATE:
5/22/2023

SHEET TITLE

ACOUTICAL TILE CEILING DETAILS

A-106

© 2020 Architects Gallegos + Eckle inc. dba AlphaStudio Design Group

STRUCTURAL SYSTEM OF FLOOR/ ROOF ABOVE SUSPENDED CEILING	APPLICABLE HANGER WIRE DETAIL	APPLICABLE BRACE WIRE DETAIL
SAWN TIMBER	4.25/A-704 & 4.29/A-704	4.35/A-704
WOOD I-JOIST	4.26/A-704	4.36/A-704 & 4.37/A-704

Detail Title : HANGER AND BRACE WIRE CONNECTION TABLE | REV: 09/21/2015 | REV: 03/2022 | Detail No. 4.11

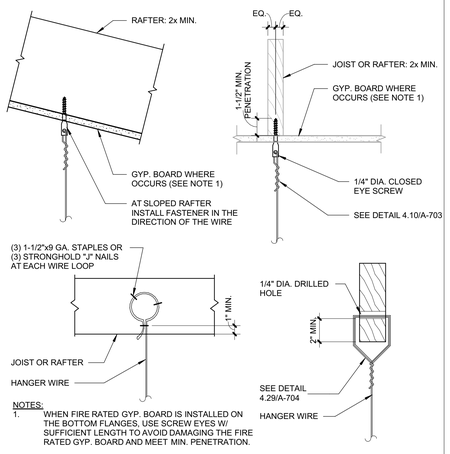

NOTES:
1. WHEN FIRE RATED GYP. BOARD IS INSTALLED ON THE BOTTOM FLANGES, USE SCREW EYES W/ SUFFICIENT LENGTH TO AVOID DAMAGING THE FIRE RATED GYP. BOARD AND MEET MIN. PENETRATION.

Detail Title : HANGER WIRE CONNECTION TO SAWN TIMBER | REV: 09/21/2015 | REV: 03/2022 | Detail No. 4.25

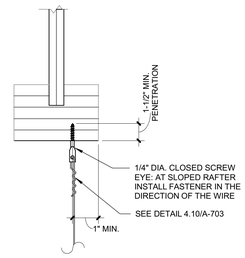

NOTES:
1. WHEN FIRE RATED GYP. BOARD IS INSTALLED ON THE BOTTOM FLANGES, USE SCREW EYES W/ SUFFICIENT LENGTH TO AVOID DAMAGING THE FIRE RATED GYP. BOARD AND MEET MIN. PENETRATION.

Detail Title : HANGER WIRE CONNECTION TO WOOD I-JOIST | REV: 09/21/2015 | REV: 03/2022 | Detail No. 4.26

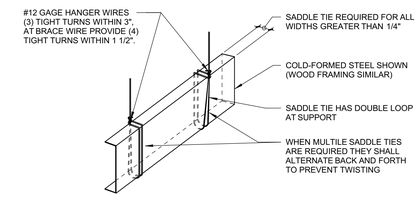

Detail Title : TYPICAL SADDLE TIE DETAIL | REV: 09/21/2015 | REV: 03/2022 | Detail No. 4.29

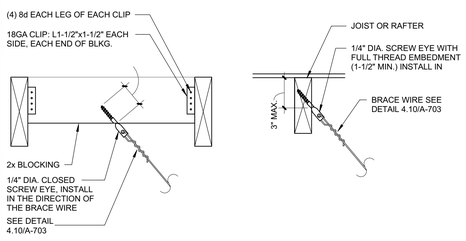

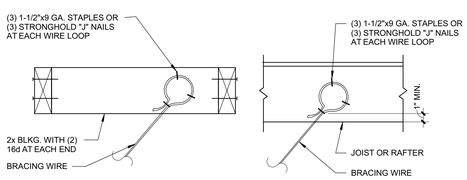

Detail Title : BRACE WIRE CONNECTION TO SAWN TIMBER | REV: 09/21/2015 | REV: 03/2022 | Detail No. 4.35

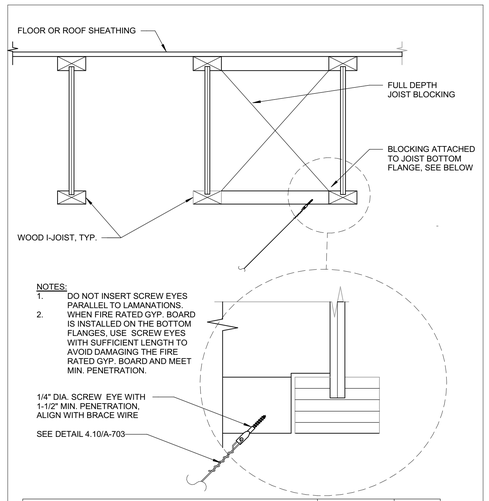

NOTES:
1. DO NOT INSERT SCREW EYES PARALLEL TO LAMANATIONS.
2. WHEN FIRE RATED GYP. BOARD IS INSTALLED ON THE BOTTOM FLANGES, USE SCREW EYES WITH SUFFICIENT LENGTH TO AVOID DAMAGING THE FIRE RATED GYP. BOARD AND MEET MIN. PENETRATION.

Detail Title : BRACE WIRE CONNECTION TO WOOD I-JOIST | REV: 09/21/2015 | REV: 03/2022 | Detail No. 4.36

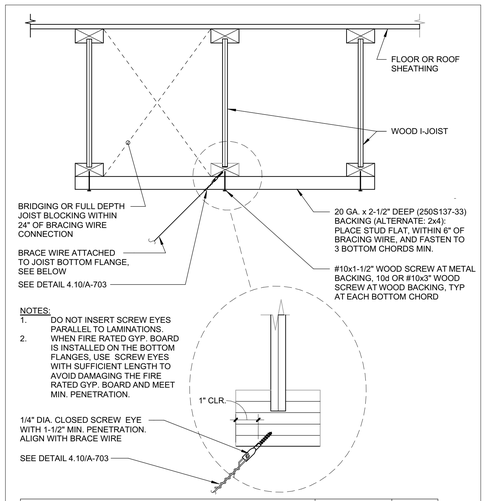

NOTES:
1. DO NOT INSERT SCREW EYES PARALLEL TO LAMINATIONS.
2. WHEN FIRE RATED GYP. BOARD IS INSTALLED ON THE BOTTOM FLANGES, USE SCREW EYES WITH SUFFICIENT LENGTH TO AVOID DAMAGING THE FIRE RATED GYP. BOARD AND MEET MIN. PENETRATION.

Detail Title : BRACE WIRE CONNECTION TO WOOD I - JOIST | REV: 09/21/2015 | REV: 03/2022 | Detail No. 4.37

STRUCTURAL SYSTEM OF FLOOR/ ROOF ABOVE SUSPENDED CEILING	APPLICABLE DETAIL
SAWN TIMBER WITH GYPSUM BOARD	5.50/A-704
SAWN TIMBER WITHOUT GYPSUM BOARD	5.51/A-704

Detail Title : COMPRESSION STRUT CONNECTION TABLE | REV: 09/21/2015 | REV: 03/2022 | Detail No. 5.10

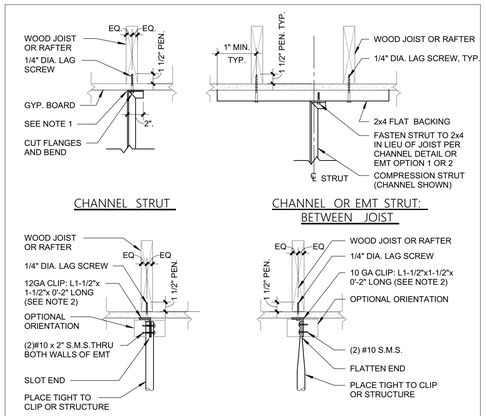

NOTES:
1. WEB OF CHANNEL TO BEAR WITHIN WIDTH OF THE WOOD MEMBER.
2. FOR ANGLE ORIENTED IN THE STANDARD POSITION, VERTICAL LEG TO FALL WITHIN THE WIDTH OF THE WOOD MEMBER.
3. PEN. = MINIMUM PENETRATION OF LAG SCREW THREADS INTO THE WOOD MEMBER.
4. NO. 14 WOOD SCREW MAY BE USED IN LIEU OF 1/4" LAG SCREW.

Detail Title : STRUT CONNECTION TO SAWN TIMBER WITH GYPSUM BOARD | REV: 09/21/2015 | REV: 03/2022 | Detail No. 5.50

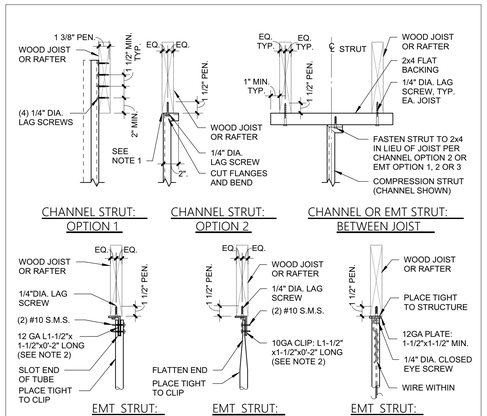

NOTES:
1. WEB OF CHANNEL TO BEAR WITHIN WIDTH OF WOOD MEMBER.
2. VERTICAL LEG OF MEMBER TO FALL WITHIN THE WIDTH OF THE WOOD MEMBER.
3. SEE DETAIL 5.50 FOR ADDITIONAL INFORMATION.
4. PEN. = MINIMUM PENETRATION OF LAG SCREW THREADS INTO THE WOOD MEMBER.
5. NO. 14 WOOD SCREW MAY BE USED IN LIEU OF 1/4" LAG SCREW.

Detail Title : STRUT CONNECTION TO SAWN TIMBER WITHOUT GYPSUM BOARD | REV: 09/21/2015 | REV: 03/2022 | Detail No. 5.51

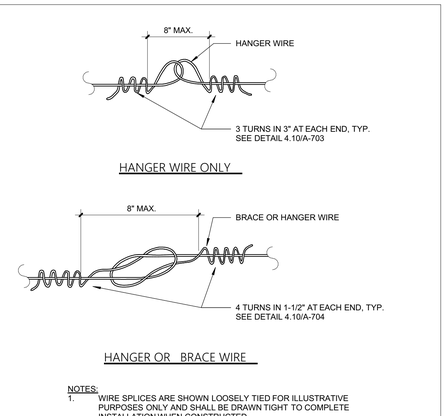

NOTES:
1. WIRE SPLICES ARE SHOWN LOOSELY TIED FOR ILLUSTRATIVE PURPOSES ONLY AND SHALL BE DRAWN TIGHT TO COMPLETE INSTALLATION WHEN CONSTRUCTED.
2. WIRE LOOPS SHALL BE TIGHTLY WRAPPED AND SHARPLY BENT TO PREVENT ANY VERTICAL MOVEMENT OR ROTATION WITHIN THE LOOPS.
3. EACH HANGER AND BRACE WIRE SHALL BE SPLICED NO MORE THAN ONCE ALONG ITS LENGTH.

Detail Title : CEILING WIRE SPLICES | REV: 09/21/2015 | REV: 03/2022 | Detail No. 6.10

ALPHASTUDIO DESIGN GROUP
6152 INNOVATION WAY
CARLSBAD, 92009
760-431-2444
www.alphastudio-design.com

ARCHITECT OF RECORD

LICENSED ARCHITECT
PAUL R. GALLEGOS
No. C24063
EXP. 01/25
STATE OF CALIFORNIA

ENGINEER OF RECORD

CENTRAL KITCHEN IMPROVEMENTS

LAKESIDE UNION SCHOOL DISTRICT

12335 WOODSIDE AVE
LAKESIDE, CA 92040

LAKESIDE UNION SCHOOL DISTRICT
12335 WOODSIDE AVE LAKESIDE CA 92040

REVISIONS

MARK	DATE	DESCRIPTION

PROJECT NO: #PIn

MODEL FILE:
23-002 LUSD Central Kitchen Improvements_Draft_23-03-17.pln

PLOT DATE:
5/22/2023

SHEET TITLE

ACOUTICAL TILE CEILING DETAILS

A-107

T:\ASDG Projects\Active Projects\23-002 LUSD Central Kitchen Improvements\23-002 LUSD Central Kitchen Improvements_Draft_23-03-17.pln

© 2020 Architects Gallegos + Eckle inc. dba AlphaStudio Design Group

T:\ASDG Projects\Active Projects\23-002 LUSD Central Kitchen Improvements\23-002 LUSD Central Kitchen Improvements_Draft_23-03-17.pln

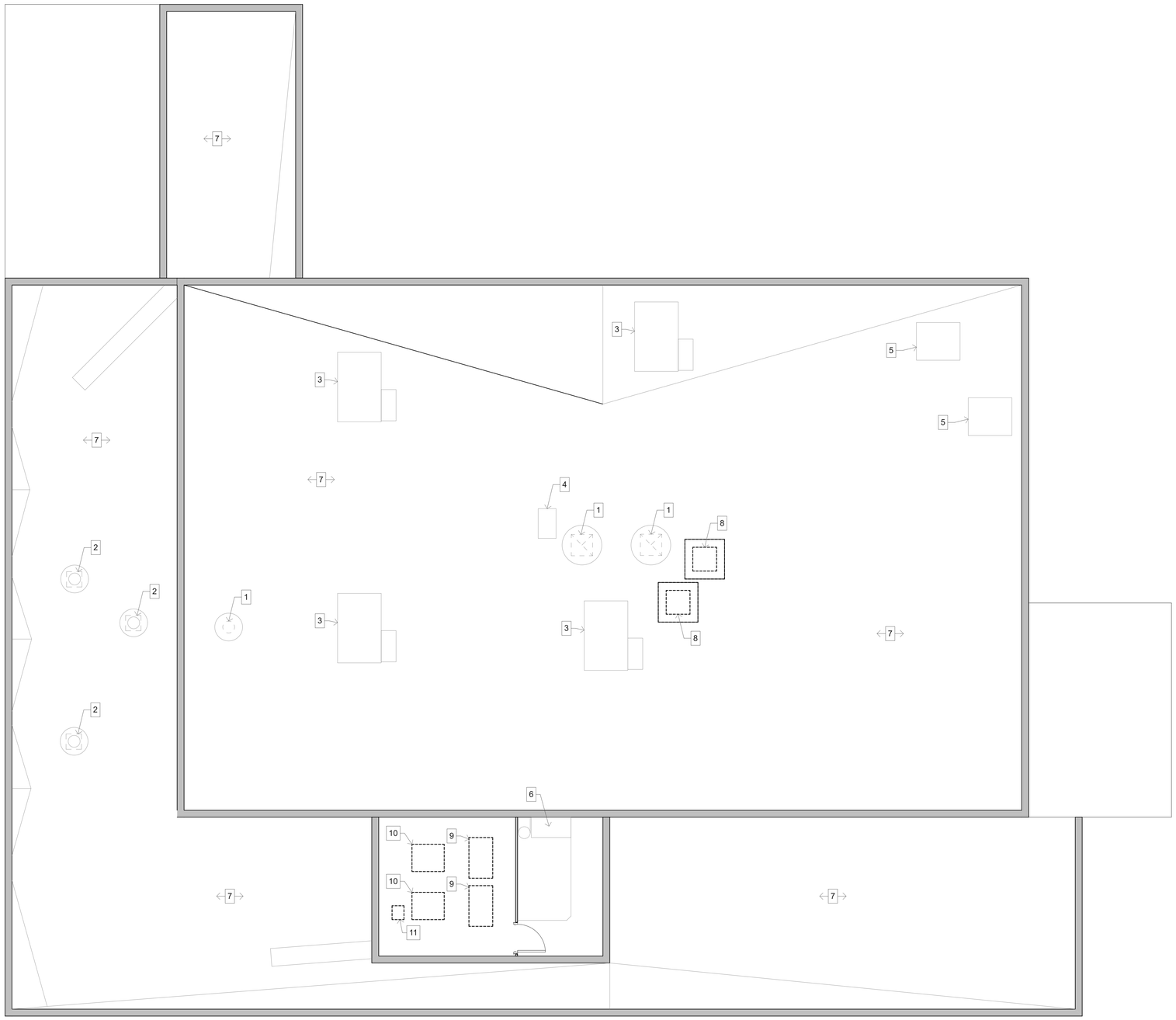

1 DEMOLITION ROOF PLAN

SCALE: 1/4" = 1'-0"

0 2' 4' 8'

NOTES

1. EXISTING EXHAUST FAN TO REMAIN.
2. EXISITNG GRAVITY RELIEF VENTILATOR TO REMAIN.
3. EXISTING HVAC EQUIPMENT TO REMAIN.
4. EXISTING OVEN EXHAUST OUTLET TO REMAIN.
5. EXISTING WALK-IN FREEZER CONDENSING UNIT TO REMAIN.
6. EXISTING MECHANICAL PENTHOUSE EQUIPMENT TO REMAIN.
7. EXISTING ROOFING TO REMAIN.
8. DEMO AND REMOVE EXISTING EXHAUST FAN.
9. DEMO AND REMOVE EXISTING DUCT FURNACE.
10. DEMO AND REMOVE EXISTING SUPPLY FAN.
11. DEMO AND REMOVE EXISTING MOTOR.

ALPHASTUDIO DESIGN GROUP

6152 INNOVATION WAY
CARLSBAD, 92009
760-431-2444
www.alphastudio-design.com

ARCHITECT OF RECORD

LICENSED ARCHITECT
PAUL R. GALLEGOS
No. C24063
EXP. 01/25
STATE OF CALIFORNIA

ENGINEER OF RECORD

CENTRAL KITCHEN IMPROVEMENTS

LAKESIDE UNION SCHOOL DISTRICT

12335 WOODSIDE AVE
LAKESIDE, CA 92040

LAKESIDE UNION SCHOOL DISTRICT
12335 WOODSIDE AVE LAKESIDE CA 92040

REVISIONS

MARK	DATE	DESCRIPTION

PROJECT NO: #PIn

MODEL FILE:
23-002 LUSD Central Kitchen Improvements_Draft_23-03-17.pln

PLOT DATE:
5/22/2023

SHEET TITLE

DEMOLITION ROOF PLAN

A-108

© 2020 Architects Gallegos + Eckle inc. dba AlphaStudio Design Group

T:\ASDG Projects\Active Projects\23-002 LUSD Central Kitchen Improvements\23-002 LUSD Central Kitchen Improvements_Draft_23-03-17.pln

1 NEW WORK ROOF PLAN
SCALE: 1/4" = 1'-0"

NOTES

1. EXISTING EXHAUST FAN TO REMAIN.
2. EXISITNG GRAVITY RELIEF VENTILATOR TO REMAIN.
3. EXISTING HVAC EQUIPMENT TO REMAIN.
4. EXISTING OVEN EXHAUST OUTLET TO REMAIN.
5. EXISTING WALK-IN FREEZER CONDENSING UNIT TO REMAIN.
6. EXISTING MECHANICAL PENTHOUSE EQUIPMENT TO REMAIN.
7. EXISTING ROOFING TO REMAIN.
8. NEW EXHAUST FAN PER MECHANICAL DRAWINGS.
9. NEW SUPPLY FAN PER MECHANICAL DRAWINGS.
10. NEW DUCT FURNACE PER MECHANICAL DRAWINGS.
11. NEW REMOTE OUTDOOR UNIT PER MECHANICAL DRAWINGS.
12. SHADING INDICATES AREA OF ROOFING REPAIR FOR NEW EXHAUST FANS.
13. NEW LEVEL PLATFORM PER DETAIL 13/S1.0 .
14. NEW GRAVITY INTAKE HOOD PER MECHANICAL DRAWINGS.

ALPHASTUDIO DESIGN GROUP

6152 INNOVATION WAY
CARLSBAD, 92009
760-431-2444
www.alphastudio-design.com

ARCHITECT OF RECORD

LICENSED ARCHITECT
PAUL R. GALLEGOS
No. C24063
EXP. 01/25
STATE OF CALIFORNIA

ENGINEER OF RECORD

CENTRAL KITCHEN IMPROVEMENTS

LAKESIDE UNION SCHOOL DISTRICT

12335 WOODSIDE AVE
LAKESIDE, CA 92040

LAKESIDE UNION SCHOOL DISTRICT
12335 WOODSIDE AVE LAKESIDE CA 92040

REVISIONS

MARK	DATE	DESCRIPTION

PROJECT NO: #PIn

MODEL FILE:
23-002 LUSD Central Kitchen Improvements_Draft_23-03-17.pln

PLOT DATE:
5/22/2023

SHEET TITLE

NEW WORK ROOF PLAN

A-109

© 2020 Architects Gallegos + Eckle inc. dba AlphaStudio Design Group

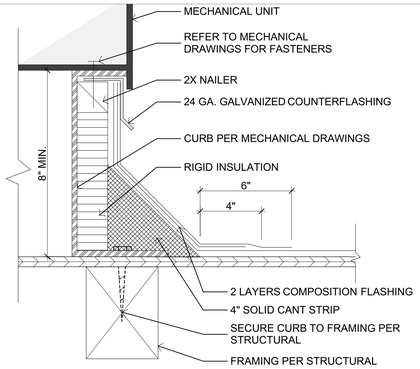

9 MECHANICAL CURB
SCALE: 3" = 1'-0"

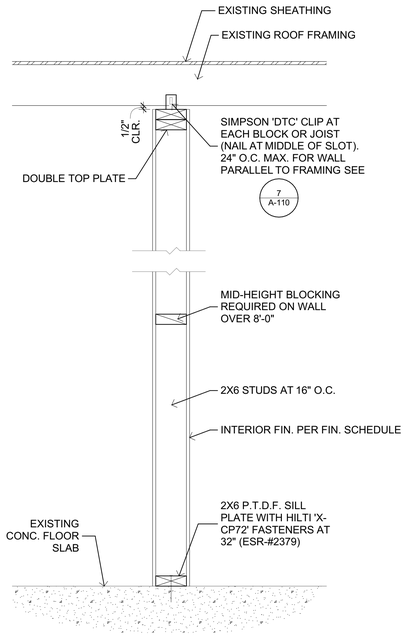

6 NON-BEARING PARTITION
SCALE: 1" = 1'-0"

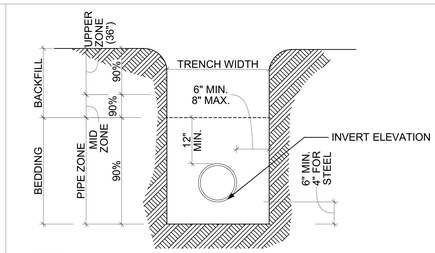

NOTES:
1. FOR TRENCHING OF EXISTING SURFACES REFER TO TRENCH RESURFACING DETAIL.
2. (*) INDICATES MIN. RELATIVE COMPACTION.
3. BEDDING MATERIAL SHALL EITHER BE SAND, GRAVEL, CRUSHED AGGREGATE, OR NATIVE FREE DRAINING GRANULAR MATERIAL HAVING SAND EQUILVALENT OF NOT LESS THAN 50 AND EXPANSION COEFFICIENT OF NOT MORE THAN .5 OF 1% (.5%).

1 PIPE TRENCH
SCALE: 3/4" = 1'-0"

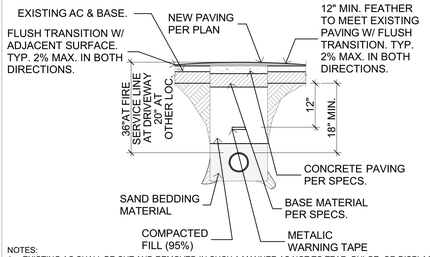

NOTES:
1. EXISTING AC SHALL BE CUT AND REMOVED IN SUCH A MANNER AS NOT TO TEAR, BULGE, OR DISPLACE ADJACENT PAVEMENT. EDGES SHALL BE CLEAN AND VERTICAL.
2. BASE MATERIAL TO BE REPLACED TO DEPTH OF EXISTING BASE - IF EXISTING BASE IS NOT PRESENT PROVIDE A MIN. BASE DEPTH OF 6". AC MAY BE SUBSTITUTED FOR BASE MATERIAL.
3. A TACK COAT OF ASPHALTIC EMULSION OR PAVING ASPHALT SHALL BE APPLIED TO EXISTING AC AT ALL CONTACT SURFACES PRIOR TO RESURFACING.
4. AC RESURFACING SHALL HAVE A MIN. TOTAL THICKNESS OF 1" GREATER THAN EXISTING AC. AC. SHALL BE HOT PLANT MIX.
5. ALL AC RESURFACING SHALL BE SEALED COATED W/ AN EMULSIFIED ASPHALT AND COVERED W/ SAND.
6. AT PEDESTRIAN WAYS. SURFACING SHALL COMPLY W/ CBC 11B-302 AND 11B-303 TYP.
7. 1:48 MAX. SLOPE IN ALL DIRECTIONS IN PATH OF TRAVEL.

2 TRENCH RESURFACING
SCALE: 3/4" = 1'-0"

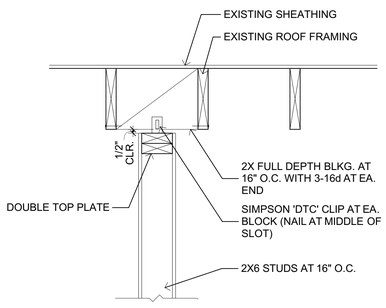

7 PART. PARALLEL TO FRAMING
SCALE: 1" = 1'-0"

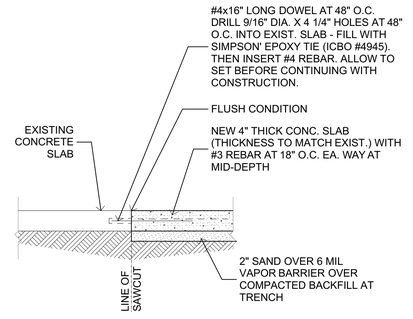

3 SLAB REPAIR AT TRENCH
SCALE: 1" = 1'-0"

FINISH SCHEDULE

NAME	FLOOR	BASE	WALLS					CEILING		REMARKS
			ELEV. 1	ELEV. 2	ELEV. 3	ELEV. 4	WAINSCOT	MAT.	HEIGHT	
KITCHEN	F1	B1	W1, FN1	W1, FN1	W1, FN1	W1, FN1	WT1	C1	11'-0"	

ROOM FINISH LEGEND

FLOOR	F1	SAND, POLISH, AND RE-SEAL CONCRETE	WALLS	W1 (E) PLASTER/GYPSUM DRYWALL - 5/8"
CEILINGS	C1	ACOUSTICAL TILE CEILING (2X4)	WAINSCOT	WT1 NONE
FINISHES	FN1	SEMI-GLOSS	BASE	B1 SLIMFOOT TILE BASE

GENERAL NOTES
1. ALL FINISHES SHALL BE IN COMPLIANCE WITH CCR. TITLE 19, 2022 CBC & 2022 CALIFORNIA FIRE CODE
2. INTERIOR FINISH DECORATIVE MATERIALS AND FURNISHINGS SHALL COMPLY WITH 2022 C.F.C. SECTION 807.4.2 FOR GROUP 'A' OCCUPANCIES AND SECTION 807.4.3 FOR GROUP 'E' OCCUPNACIES

FINISH NOTES
1. GYPSUM BOARD FINISH AT CEILING TO BE INSTALLED AT UNDERSIDE OF ROOF FRAMING.
2. SEE INTERIOR ELEVATIONS FOR LOCATION OF VINYL COVRED TACKBOARD BAND AT WALL.

ALPHASTUDIO DESIGN GROUP
6152 INNOVATION WAY
CARLSBAD, 92009
760-431-2444
www.alphastudio-design.com

ARCHITECT OF RECORD

LICENSED ARCHITECT
PAUL R. GALLEGOS
No. C24063
EXP. 01/25
STATE OF CALIFORNIA

ENGINEER OF RECORD

CENTRAL KITCHEN IMPROVEMENTS
LAKESIDE UNION SCHOOL DISTRICT
12335 WOODSIDE AVE
LAKESIDE, CA 92040

LAKESIDE UNION SCHOOL DISTRICT
12335 WOODSIDE AVE LAKESIDE CA 92040

REVISIONS

MARK	DATE	DESCRIPTION

PROJECT NO: #Pln
MODEL FILE:
23-002 LUSD Central Kitchen Improvements_Draft_23-03-17.pln
PLOT DATE:
5/22/2023

SHEET TITLE
DETAILS AND FINISH SCHEDULE

A-110

T:\ASDG Projects\Active Projects\23-002 LUSD Central Kitchen Improvements\23-002 LUSD Central Kitchen Improvements_Draft_23-03-17.pln

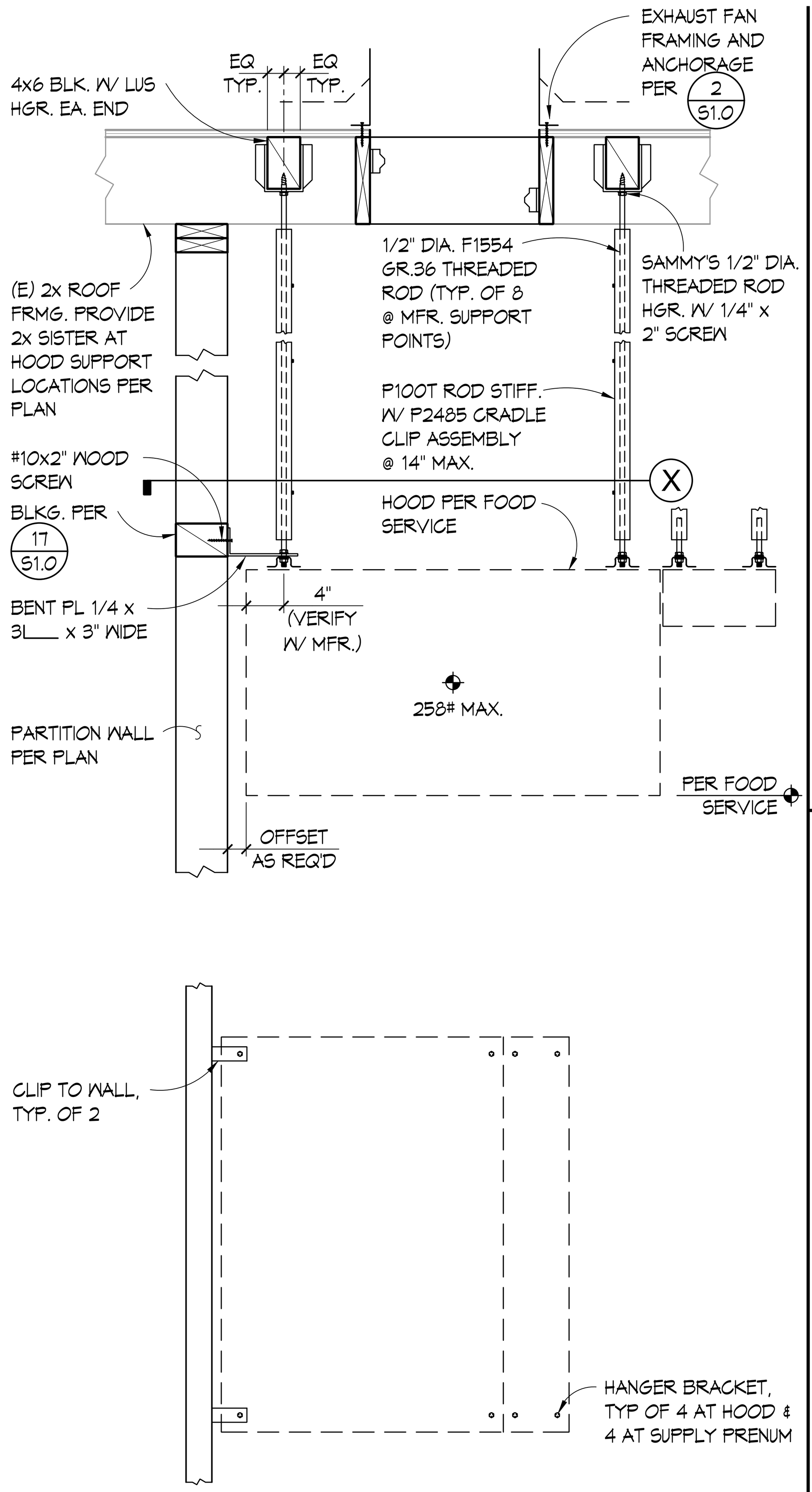

KITCHEN HOOD ANCHORAGE 6

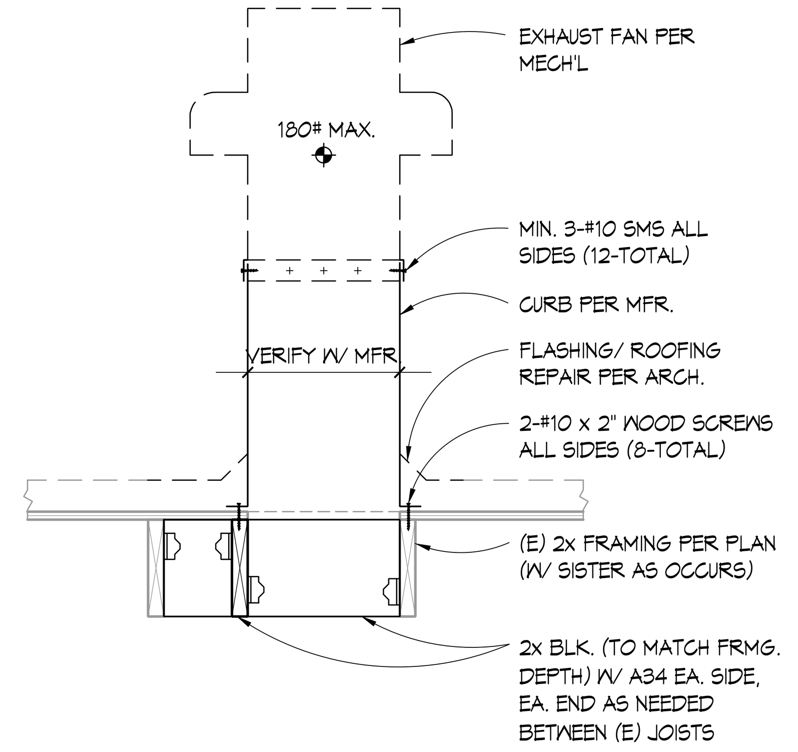

KEF & GI ANCHORAGE 2

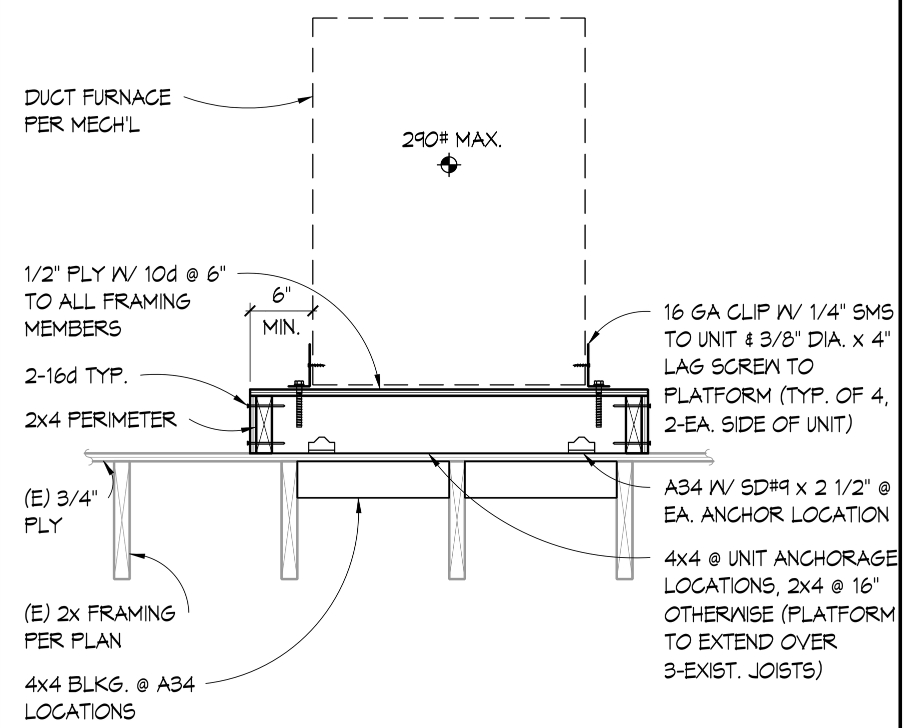

DF ANCHORAGE 3

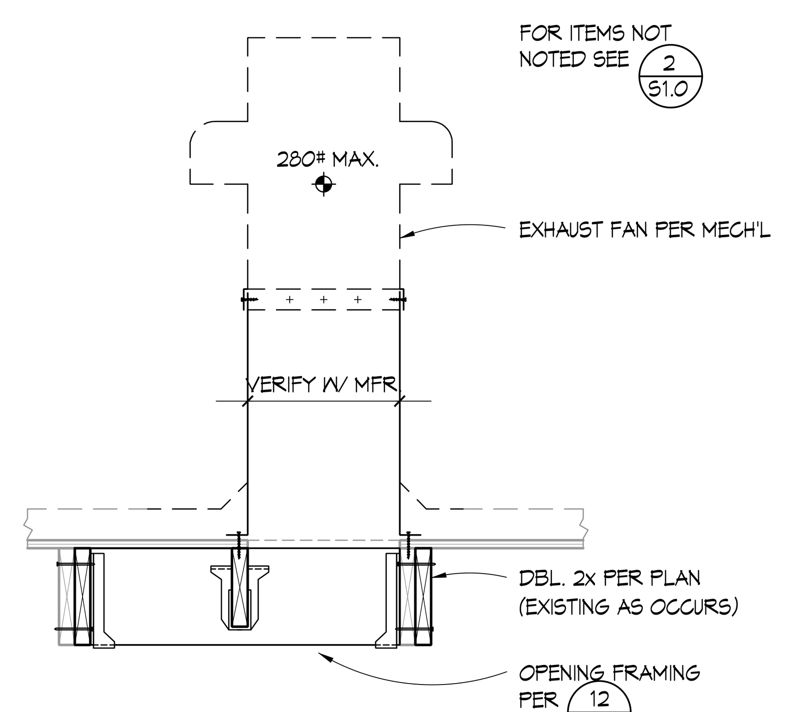

EF ANCHORAGE 7

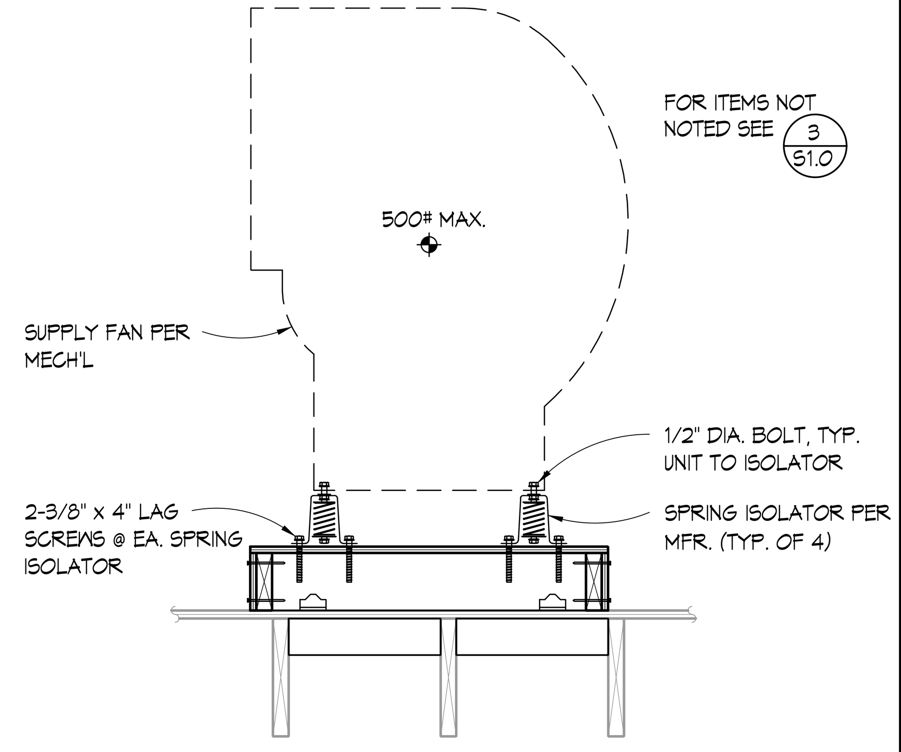

SF ANCHORAGE 8

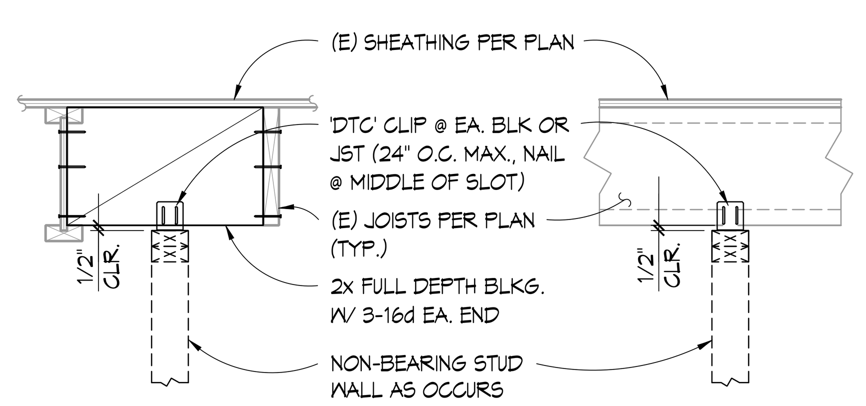

TYP. NON-BEARING WOOD WALL ATTACH. 11

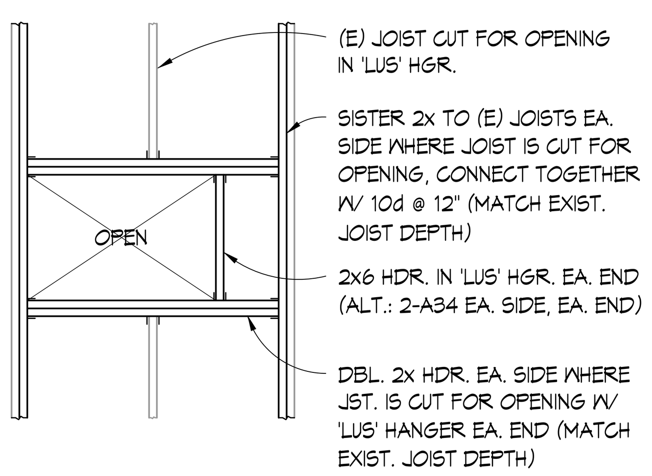

NOTE: NO MORE THAN 2-JOISTS SHALL BE CUT AT AN OPENING

TYPICAL 2x FRAMING @ OPENINGS GREATER THAN EXISTING JOIST SPACING 12

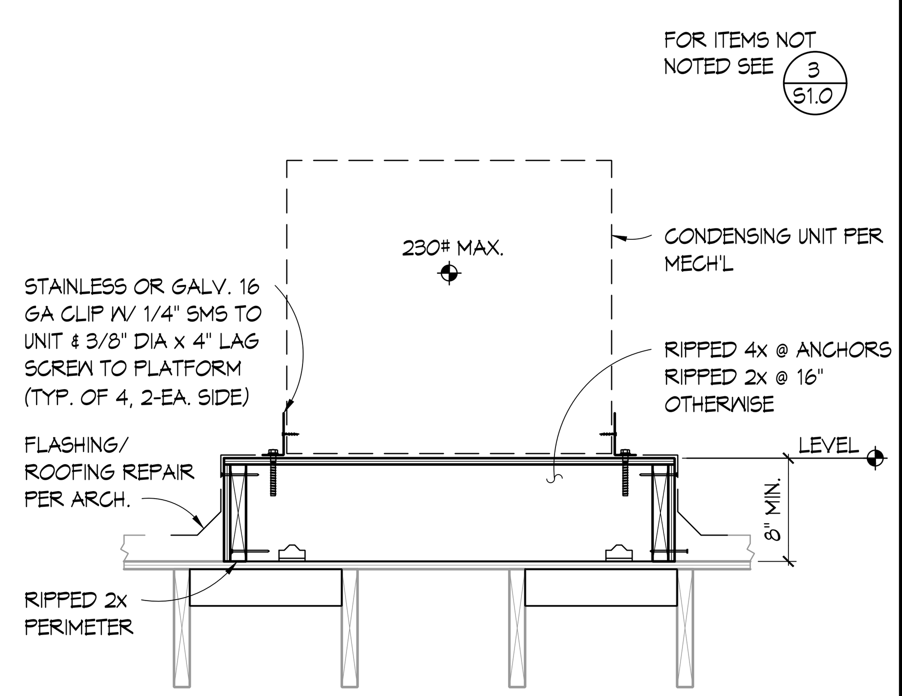

SSCU ANCHORAGE 13

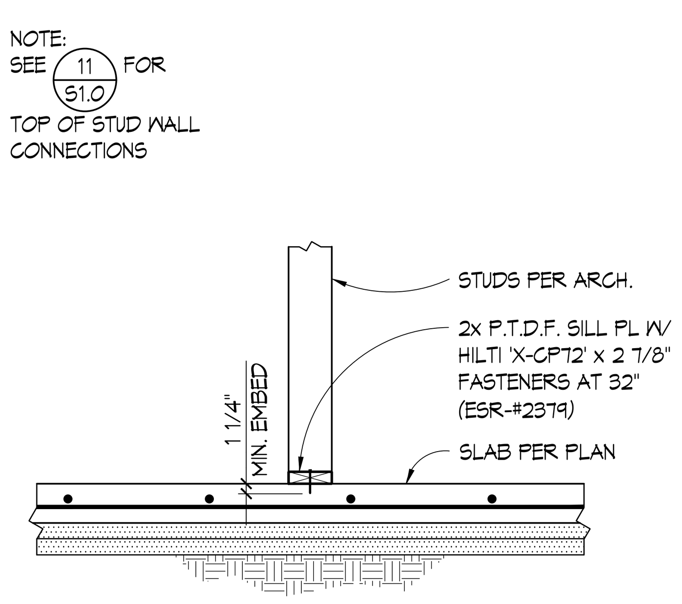

TYP NON-STRUCTURAL PARTITION ATTACHMENT TO SLAB 16

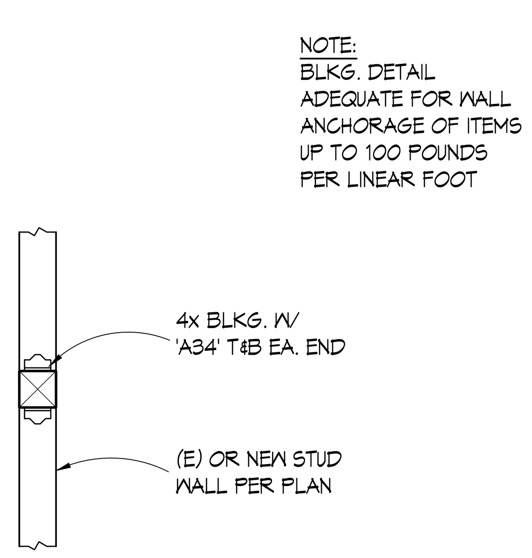

TYP. BLK'G DETAIL 17

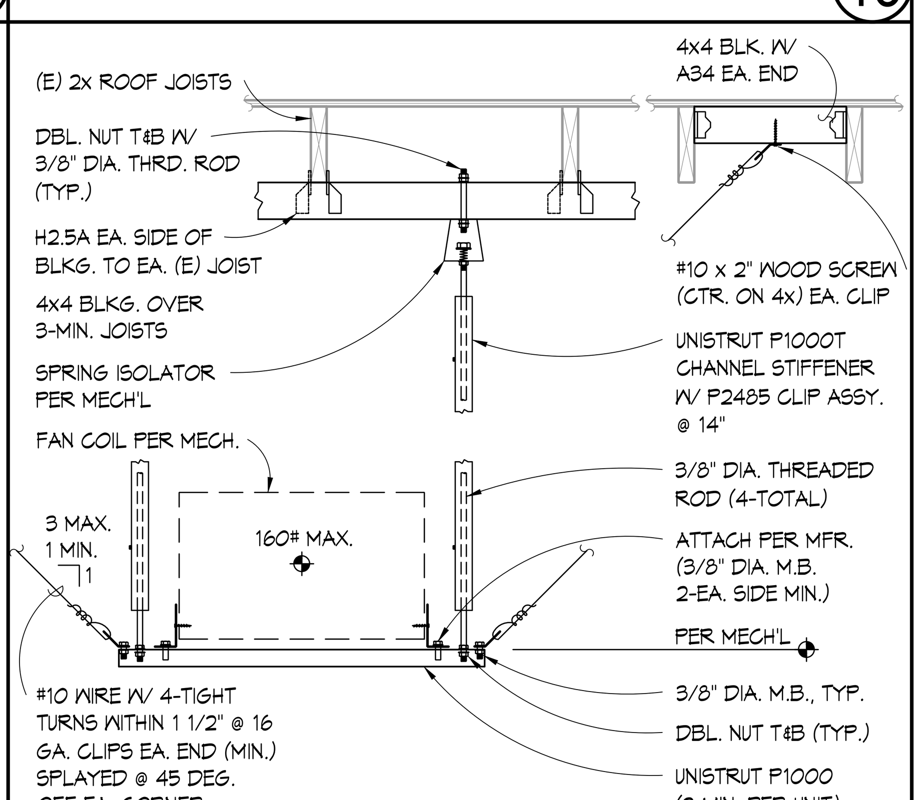

FAN COIL SUPPORT 18

GENERAL NOTES

1. NOTES AND DETAILS ON THE STRUCTURAL DRAWINGS TAKE PRECEDENCE OVER THESE STANDARD STRUCTURAL NOTES. TYPICAL DETAILS SHALL BE USED WHENEVER APPLICABLE. REFER TO SPECIFICATIONS FOR INFORMATION NOT COVERED BY THESE NOTES OR DRAWINGS. THESE NOTES TAKE PRECEDENCE OVER ANY OTHER BOOK SPECIFICATIONS.
2. THE CONTRACTOR SHALL VERIFY ALL DIMENSIONS, ELEVATIONS, AND SITE CONDITIONS BEFORE STARTING WORK, AND THE ENGINEER/ ARCHITECT SHALL BE IMMEDIATELY NOTIFIED, IN WRITING, OF ANY DISCREPANCIES. IN NO CASE SHALL DIMENSIONS BE SCALED FROM PLANS, SECTIONS, OR DETAILS ON THE STRUCTURAL DRAWINGS.
3. ALL OMISSIONS AND CONFLICTS BETWEEN THE VARIOUS ELEMENTS OF THE DRAWINGS AND/OR SPECIFICATIONS SHALL BE BROUGHT TO THE ATTENTION OF, AND RESOLVED WITH, THE ENGINEER BEFORE PROCEEDING WITH ANY WORK SO INVOLVED.
4. WHERE A CONSTRUCTION DETAIL IS NOT SHOWN OR NOTED, THE DETAIL SHALL BE THE SAME AS FOR OTHER SIMILAR WORK.
5. THE CONTRACTOR SHALL DETERMINE THE LOCATION OF UTILITY SERVICES IN THE AREA TO BE EXCAVATED, BEFORE BEGINNING EXCAVATION.
6. NO PIPES, DUCTS, SLEEVES, CHASES, ETC. SHALL BE PLACED IN SLABS, BEAMS, OR WALLS, NOR SHALL ANY STRUCTURAL MEMBER BE CUT FOR PIPES, DUCTS, ETC. THE CONTRACTOR SHALL OBTAIN PRIOR APPROVAL FOR INSTALLATION OF ANY ADDITIONAL PIPES, DUCTS, ETC.
7. ALL MATERIAL AND WORKMANSHIP SHALL CONFORM TO THE REQUIREMENTS OF THE 2022 CALIFORNIA BUILDING CODE (CBC).
8. THE CONTRACTOR SHALL ASSUME SOLE AND COMPLETE RESPONSIBILITY FOR JOB SITE CONDITIONS DURING THE COURSE OF CONSTRUCTION OF THIS PROJECT, INCLUDING SAFETY OF ALL PERSONS AND PROPERTY. THIS REQUIREMENT SHALL APPLY CONTINUOUSLY AND NOT BE LIMITED TO NORMAL WORKING HOURS. THE CONTRACTOR SHALL DEFEND, INDEMNIFY, AND HOLD THE ENGINEER FREE AND HARMLESS FROM ALL CLAIMS, DEMANDS, AND ALL LIABILITY, REAL OR ALLEGED, IN CONNECTION WITH THE PERFORMANCE OF WORK ON THIS PROJECT.
9. SITE VISITS PERFORMED BY THE ARCHITECT/ENGINEER DO NOT INCLUDE INSPECTIONS OF MEANS AND METHODS OF CONSTRUCTION PERFORMED BY THE CONTRACTOR. ALSO, SITE VISITS DO NOT GUARANTEE CONTRACTOR'S PERFORMANCE AND SHALL NOT BE CONSIDERED AS SUPERVISION OF CONSTRUCTION.
10. RETAIN A CALIFORNIA REGISTERED CIVIL ENGINEER TO DESIGN ALL TEMPORARY BRACING, SHORING, AND SUPPORT REQUIRED DURING CONSTRUCTION, INCLUDING CONSTRUCTION LOADS AND EQUIPMENT.
11. INCLUDE ENGINEERING FEES, ENGINEERING DESIGN TIME, AND BUILDING DEPARTMENT APPROVAL TIME IN THE COST OF PROPOSED MATERIAL ALTERNATES. CONTACT ENGINEER FOR FEE AMOUNT. SUBMIT MATERIAL ALTERNATE FOR REVIEW BEFORE CONSTRUCTION.
12. STRUCTURAL CAD DRAWINGS SHALL NOT BE USED FOR SHOP DRAWINGS UNLESS AN AGREEMENT BETWEEN THE STRUCTURAL ENGINEER AND CONTRACTOR HAS BEEN ESTABLISHED ACCORDING TO CASE DOCUMENT . CONTACT ENGINEER FOR FEE AMOUNT.
13. SHOP DRAWINGS: THE CONTRACTOR SHALL REVIEW SHOP DRAWINGS FOR COMPLETENESS AND COMPLIANCE WITH CONTRACT DOCUMENTS. CONTRACTOR SHALL STAMP SHOP DRAWINGS PRIOR TO SUBMISSION TO ARCHITECT/ENGINEER. THE ARCHITECT'S/ENGINEER'S REVIEW OF THE SHOP DRAWINGS SHALL NOT BE CONSTRUED AS AN AUTHORIZATION TO DEVIATE FROM THE CONTRACT DOCUMENTS. ALSO, SHOP DRAWINGS WILL NOT BE PROCESSED DUE TO INCOMPLETENESS, LACK OF COORDINATION WITH RELEVANT PORTIONS OF CONTRACT DOCUMENTS, LACK OF CALCULATIONS WHEN REQUIRED, OR WHERE DEVIATIONS, MODIFICATIONS, OR SUBSTITUTIONS ARE INDICATED WITHOUT PRIOR WRITTEN APPROVAL FROM THE ARCHITECT/ENGINEER.
14. ANY REFERENCE TO THE WORDS "APPROVED" OR "APPROVAL" IN THESE DOCUMENTS SHALL BE HERE DEFINED TO MEAN GENERAL ACCEPTANCE OR REVIEW AND SHALL NOT RELIEVE THE CONTRACTOR AND/OR SUB-CONTRACTORS OF ANY LIABILITY IN FURNISHING THE REQUIRED MATERIALS OR LABOR SPECIFIED.
15. CONNECTION OF ALL ITEMS SUPPORTED BY THE STRUCTURE ARE THE RESPONSIBILITY OF THE DISCIPLINES WHO ARE MAKING THESE ATTACHMENTS, THESE ATTACHMENTS SHALL BE DESIGNED TO RESIST ALL GRAVITY, WIND, SEISMIC, THERMAL LOADS, ETC. SPRINKLER PIPING SHALL BE SUPPORTED AND BRACED PER APPLICABLE STANDARDS, SUSPENDED CEILING SYSTEMS OF ACOUSTICAL TILE OR LAY-IN PANELS SHALL BE SUPPORTED AND BRACED PER CURRENT CODE REQUIREMENTS, SEE ARCHITECTURAL DRAWINGS.

DESIGN CRITERIA

1. VERTICAL LOADS:
   A. DEAD LOADS:
      ROOF (FLAT) .... 16 PSF
   B. LIVE LOADS: REDUCIBLE UNLESS NOTED OTHERWISE
      ROOF (FLAT)......................... 20 PSF
2. LATERAL LOADS:
   A. WIND: PER ASCE 7-16 (IBC 2022)
      BASIC WIND SPEED-3 SECOND GUST (V3s).......... 97 MPH
      TOPOGRAPHIC FACTOR (Kzt)............................ 1.0
      RISK CATEGORY II
      EXPOSURE CATEGORY...................................... C
      ENCLOSURE CLASSIFICATION............................ ENCLOSED
   B. SEISMIC: PER ASCE 7-16 (IBC 2022)
      RISK CATEGORY.. II
      SEISMIC IMPORTANCE FACTOR (IE).................. 1.0
         RHO (N-S).. 1.0
         RHO (E-W).. 1.0
      MAPPED SPECTRAL RESPONSE ACCELERATIONS:
         SS= 0.77 G
         S1= 0.283 G
      SITE CLASS:... D
      SPECTRAL RESPONSE COEFFICIENTS:
         Sds= 0.616 G
         Sd1= N/A
      SEISMIC DESIGN CATEGORY:.............................. D

WOOD (CBC CHAPTER 23)

1. ALL WOOD MEMBERS SHALL BE DOUGLAS FIR (DF) OR LARCH GRADE MARKED BY A RECOGNIZED GRADING AGENCY (WCLIB & WWPA)
2. WOOD GRADES:
   A. FOR HORIZONTAL MEMBERS:
      2 X..GRADE #2
3. APA RATED SHEATHING CONFORMING TO APA DOC PS-1 SHALL BE USED FOR FLOOR, ROOF, AND WALL SHEATHING IN ACCORDANCE WITH CBC SECTION 2303.1.5.
4. NOTCHING AND BORING OF STUDS AND JOISTS SHALL BE PERMITTED ONLY AS DETAILED OR APPROVED BY THE ENGINEER.
5. AS A MINIMUM, ALL NAILING SHALL BE WITH COMMON NAILS, EXCEPT AS NOTED IN CBC TABLE 2304.10.2.
6. 10d COMMON NAILS SHALL BE USED FOR ATTACHMENT OF PLYWOOD SHEATHING WITH MININUM 1 1/2 PENETRATION INTO FRAMING MEMBER.
9. LAG SCREWS: SHALL BE FULL BODY DIAMETER ACCORDING TO ANSI B18.2.1 PRE-DRILL LEAD WITH A BIT SIZE OF 40% TO 70% OF THE SHANK DIAMETER FOR THE THREADED PORTION. CLEARANCE HOLE TO BE THE SAME LENGTH AND DIAMETER AS THE UN-THREADED SHANK. LUBRICATE LAGS AND SCREW INTO PLACE.
10. WOOD SCREWS SHALL BE CUT THREAD ACCORDING TO ANSI B18.6.1
11. WASHERS: ALL BOLT HEADS, LAG SCREWS AND NUTS BEARING ON WOOD SHALL HAVE STANDARD CUT WASHERS. SEE SHEARWALL SCHEDULE FOR ADDITIONAL SILL PLATE WASHER REQUIREMENTS.
12. ALL FRAMING ANCHORS, POST CAPS, BASES, HANGERS, STRAPS, ETC., SHALL BE AS MANUFACTURED BY "SIMPSON STRONG-TIE COMPANY" LATEST CATALOG OR ENGINEER APPROVED EQUAL. SUBMIT LOAD COMPARISONS WITH CATALOG AND ICC REPORTS TO THE ENGINEER FOR APPROVAL.
13. MOISTURE CONTENT OF WOOD AT TIME OF PLACING SHALL NOT EXCEED 19%.
14. MACHINE APPLIED NAILING TO WOOD FRAMING OR PLYWOOD: SUBJECT TO SATISFACTORY JOB SITE DEMONSTRATION FOR THIS PROJECT AND APPROVAL BY THE ENGINEER AND BUILDING DEPT.. IF NAIL-HEADS PENETRATE THE OUTER PLY MORE THAN WOULD BE NORMAL FOR HAND HAMMER OR IF MINIMUM ALLOWABLE EDGE DISTANCES ARE NOT MAINTAINED, THE PERFORMANCE WILL BE DEEMED UNSATISFACTORY AND MACHINE NAILING SHALL BE DISCONTINUED.
15. FASTENERS, NAILS AND CONNECTORS IN CONTACT WITH PRESERVATIVE TREATED WOOD SHALL BE GALVANIZED IN ACCORDANCE WITH ASTM A-653 HOT DIPPED ZINC COATED GALVANIZED OR SHALL BE STAINLESS STEEL.
16. WHEN HARDWARE THAT REQUIRES 10d x 1 1/2" NAILS ARE INSTALLED OVER SHEATHING. THE LENGTH OF THE NAILS USED SHALL BE INCREASED BY THE THICKNESS OF THE SHEATHING.

ALPHASTUDIO DESIGN GROUP
6152 INNOVATION WAY
CARLSBAD, 92009
760-431-2444
www.alphastudio-design.com

ARCHITECT OF RECORD

LICENSED ARCHITECT
PAUL R. GALLEGOS
No. C24063
EXP. 01/23
STATE OF CALIFORNIA

ENGINEER OF RECORD

WISEMAN + ROHY STRUCTURAL ENGINEERS

REGISTERED PROFESSIONAL ENGINEER
JAMES M. WISEMAN
EXP. 06-30-24
STRUCTURAL
STATE OF CALIFORNIA

CENTRAL KITCHEN IMPROVEMENTS

LAKESIDE UNION SCHOOL DISTRICT
12335 WOODSIDE AVE
LAKESIDE, CA 92040

LAKESIDE UNION SCHOOL DISTRICT
12335 WOODSIDE AVENUE LAKESIDE CA 92040

REVISIONS

MARK	DATE	DESCRIPTION
-	-	-

PROJECT NO: 23023.00

MODEL FILE:
23-002 LUSD Central Kitchen Improvements_Draft_23-03-17.pln

PLOT DATE:
4/26/2023

SHEET TITLE
STRUCTURAL NOTES & DETAILS

S1.0

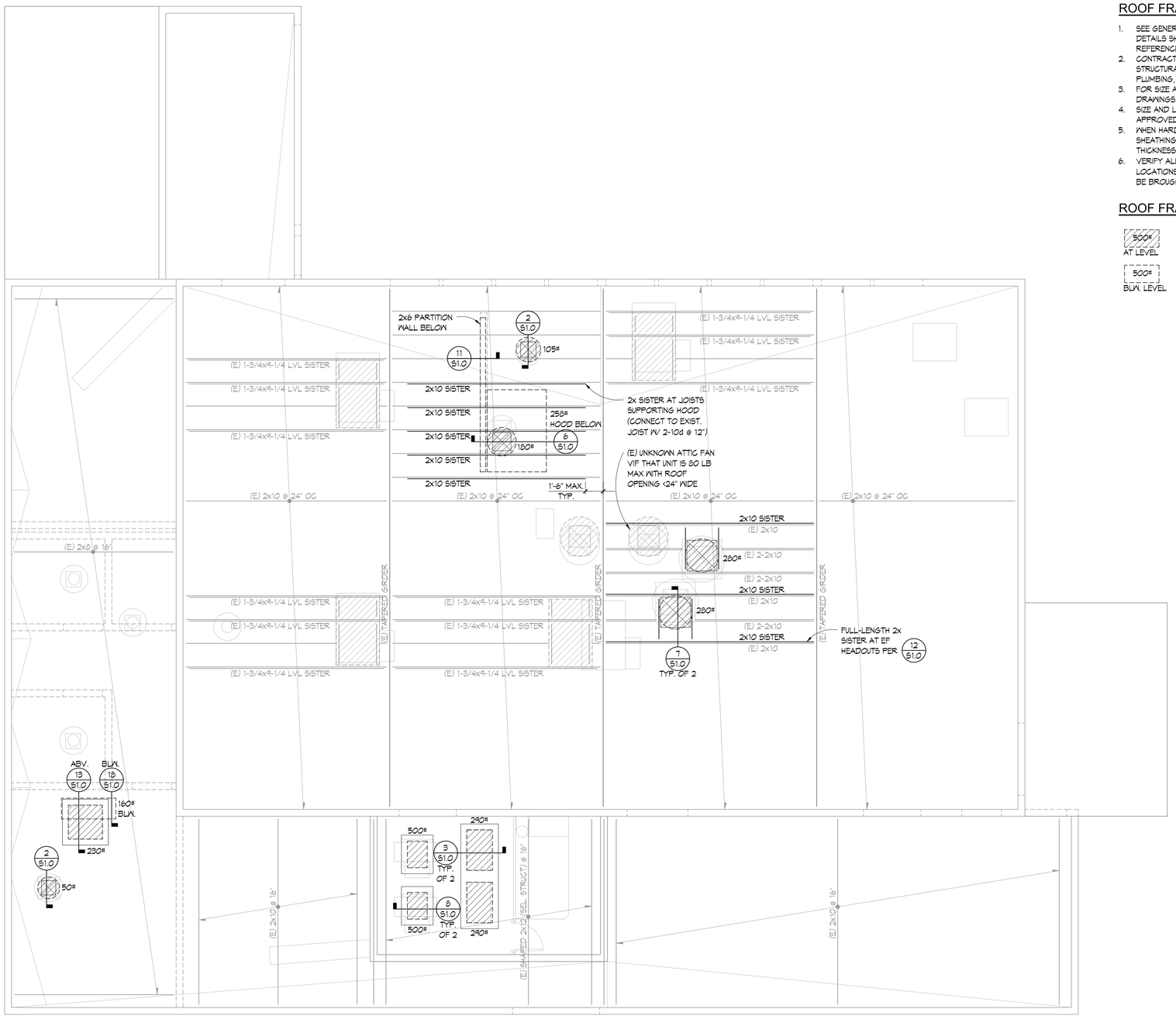

ROOF FRAMING PLAN

SCALE: 1/4" = 1'-0"

ROOF FRAMING NOTES

1. SEE GENERAL NOTES AND TYPICAL DETAILS ON SHEET S1.0. THESE NOTES AND DETAILS SHALL BE USED WHERE APPLICABLE WHETHER SPECIFICALLY REFERENCED OR NOT.
2. CONTRACTOR SHALL COORDINATE THE WORK OF ALL TRADES WITH THE STRUCTURAL REQUIREMENTS INDICATED. REFER TO CIVIL, MECHANICAL, PLUMBING, AND ELECTRICAL DRAWINGS.
3. FOR SIZE AND LOCATION OF ROOF OPENINGS, REFER TO ARCHITECTURAL DRAWINGS.
4. SIZE AND LOCATION OF ALL MECHANICAL EQUIPMENT TO BE REVIEWED AND APPROVED BY THE STRUCTURAL ENGINEER PRIOR TO PLACEMENT.
5. WHEN HARDWARE THAT REQUIRE 10d x1 1/2" NAILS ARE INSTALLED OVER SHEATHING, THE LENGTH OF NAILS USED SHALL BE INCREASED BY THE THICKNESS OF THE SHEATHING.
6. VERIFY ALL EXISTING FRAMING SIZES AND LAYOUTS (INCLUDING EXISTING UNIT LOCATIONS) ARE AS SHOWN PRIOR TO CONSTRUCTION. DISCREPANCIES SHALL BE BROUGHT TO THE ATTENTION OF THE STRUCTURAL ENGINEER.

ROOF FRAMING LEGEND

500# AT LEVEL

500# BLW. LEVEL

APPROXIMATE SIZE, LOCATION, AND ASSUMED MAXIMUM WEIGHT OF MECHANICAL EQUIPMENT. COORDINATE EXACT LOCATION OF EQUIPMENT WITH MECHANICAL DRAWINGS. WEIGHT INDICATED SHALL NOT BE EXCEEDED NOR UNIT RELOCATED WITHOUT PRIOR WRITTEN APPROVAL FROM THE STRUCTURAL ENGINEER.

ALPHASTUDIO DESIGN GROUP

6152 INNOVATION WAY
CARLSBAD, 92009
760-431-2444
www.alphastudio-design.com

ARCHITECT OF RECORD

LICENSED ARCHITECT
PAUL R. GALLEGOS
No. C24063
EXP. 01/23
STATE OF CALIFORNIA

ENGINEER OF RECORD

WISEMAN + ROHY STRUCTURAL ENGINEERS
7676 HAZARD CENTER DR. SUITE 1000
SAN DIEGO, CALIFORNIA 92108
TEL 858.636.1330
FAX 858.636.1331
www.wiseman-rohy.com

REGISTERED PROFESSIONAL ENGINEER
JAMES M. WISEMAN
EXP. 06-30-24
STRUCTURAL
STATE OF CALIFORNIA

CENTRAL KITCHEN IMPROVEMENTS

LAKESIDE UNION SCHOOL DISTRICT

12335 WOODSIDE AVE
LAKESIDE, CA 92040

LAKESIDE UNION SCHOOL DISTRICT
12335 WOODSIDE AVENUE LAKESIDE CA 92040

REVISIONS

MARK	DATE	DESCRIPTION
1	-	-

PROJECT NO: 23023.00

MODEL FILE:
23-002 LUSD Central Kitchen Improvements_Draft_23-03-17.pln

PLOT DATE:
4/26/2023

SHEET TITLE
PARTIAL ROOF FRAMING PLAN

S2.0

© 2020 Architects Gallegos + Eckle inc. dba AlphaStudio Design Group

T:\ASDG Projects\Active Projects\23-002 LUSD Central Kitchen Improvements\23-002 LUSD Central Kitchen Improvements_Draft_23-03-17.pln

MECHANICAL PLAN CHECK NOTES

1. ALL INSULATION MATERIAL SHALL COMPLY WITH THE LATEST CMC REQUIREMENTS. FLAME SPREAD-RATING OF 25 OR LESS AND A SMOKE DEVELOPED RATING OF 50 OR LESS.
2. HVAC PIPING AND DUCTWORK SYSTEMS SHALL BE INSULATED CONSISTENT WITH THE REQUIREMENTS OF SECTIONS 110.8, 120.3, AND 120.4 OF THE CALIFORNIA ENERGY EFFICIENCY STANDARDS, AND THE LATEST SECTIONS OF CALIFORNIA MECHANICAL CODE (CMC), FLAME SPREAD-RATING OF 25 OR LESS AND A SMOKE DEVELOPED RATING OF 50 OR LESS.
3. ALL HVAC EQUIPMENT AND APPLIANCES SHALL MEET THE REQUIREMENTS PER SECTIONS 110.1-110.3, 110.5 AND 120.1-120.9 OF THE CALIFORNIA ENERGY EFFICIENCY STANDARDS.
4. HVAC SYSTEMS AUTOMATIC CONTROLS SHALL COMPLY WITH THE CONTROL REQUIREMENTS PER SECTIONS 110.2 AND 120.2 OF THE CALIFORNIA ENERGY EFFICIENCY STANDARDS.
5. AT THE TIME OF PERMIT ISSUANCE, THE PERMITEE WILL PROVIDE AN APPROVED COPY OF THE CERTIFICATE OF COMPLIANCE (MECH-1) TO THE JURISDICTION FOR FILING.
6. ATTICS OR SIMILAR CONCEALED SPACE MUST BE PARTITIONED BY DRAFT STOPS INTO AREAS NOT EXCEEDING 3000 SQ. FT. IN AREA AND 60 FT. IN LENGTH (EVERY 9000 SQ. FT. AND 100 FT. IN SPRINKLED BUILDINGS).
7. AIR FILTERS SHALL BE A STATE FIRE MARSHALL APPROVED AND LISTED TYPE. PRE-FORMED FILTERS HAVING COMBUSTIBLE FRAMING SHALL BE TESTED AS A COMPLETE ASSEMBLY, AIR FILTERS IN ALL OCCUPANCIES SHALL BE CLASS 1 OR 2 (AS SHOWN IN THE STATE FIRE MARSHALL LISTING). AIR FILTERS SHALL BE ACCESSIBLE FOR CLEANING OR REPLACEMENT.
8. CERTIFICATE OF ACCEPTANCE AND ALL RELATED ACCEPTANCE DOCUMENTS SHALL BE SUBMITTED TO THE FIELD INSPECTOR DURING CONSTRUCTION. CERTIFICATE OF OCCUPANCY WILL NOT BE ISSUED UNTIL THESE FORMS ARE REVIEWED AND APPROVED.
9. PENETRATIONS IN FIRE-RESISTIVE WALLS, PARTITIONS AND FLOORS WHERE PROTECTED OPENINGS ARE REQUIRED SHALL BE FIRE STOPPED USING APPROVED MATERIALS, SECURELY INSTALLED AND CAPABLE OF MAINTAINING THEIR INTEGRITY AND PREVENTING THE MOVEMENT OF HOT FLAMES OR GASES THROUGH THE VOID SPACES BETWEEN PENETRATING MATERIALS AND WALLS, PARTITIONS AND FLOORS WHEN TESTED IN ACCORDANCE WITH LATEST ASTM OR STANDARD (PER CBC REQUIREMENTS).
10. PROVIDE DESIGN DETAILS ON DRAWINGS DEPICTING APPROVED (LISTED) METHODS AND MATERIALS USED TO PROTECT PENETRATIONS IN WALLS, PARTITIONS AND FLOORS.
11. ENVIRONMENTAL AND/OR PRODUCT CONVEYING DUCT SYSTEMS SHALL NOT EXTEND INTO OR THROUGH DUCTS OR PLENUMS. CMC SECTION 505.1.
12. DUCTS CONVEYING EXPLOSIVES OR FLAMMABLE VAPORS, FUMES OR DUSTS SHALL EXTEND DIRECTLY TO THE EXTERIOR OF THE BUILDING WITHOUT ENTERING OTHER SPACES AND SHALL NOT EXTEND INTO OR THROUGH DUCTS AND PLENUMS.
13. ELECTRICAL WIRING METHODS TO BE INSTALLED IN THE PLENUM AREAS SHALL COMPLY WITH THE LATEST SECTIONS AND REQUIREMENTS OF NEC AND CMC.
14. NONMETALLIC PNEUMATIC TUBING MUST BE LISTED AND LABELED FOR USE IN PLENUM AREAS.
15. RECESSED SPEAKER ENCLOSURES AND LIGHT FIXTURES SHALL BE LISTED AND LABELED FOR USE IN PLENUM LOCATIONS.
16. AT THE TIME OF ROUGH INSTALLATION AND DURING STORAGE ON THE CONSTRUCTION SITE UNTIL FINAL STARTUP OF THE HEATING, COOLING AND VENTILATING EQUIPMENT, ALL DUCT AND OTHER RELATED AIR DISTRIBUTION COMPONENT OPENINGS SHALL BE COVERED WITH TAPE, PLASTIC, SHEET METAL OR OTHER METHODS ACCEPTABLE TO THE ENFORCING AGENCY TO REDUCE THE AMOUNT OF DUST, WATER AND DEBRIS WHICH MAY ENTER THE SYSTEM.
17. IN MECHANICALLY VENTILATED BUILDINGS, REGULARLY OCCUPIED AREAS OF THE BUILDING SHALL BE PROVIDED WITH AIR FILTRATION MEDIA FOR OUTSIDE AND RETURN AIR THAT PROVIDES AT LEAST A MINIMUM EFFICIENCY REPORTING VALUE (MERV) OF 13. MERV 13 FILTERS SHALL BE INSTALLED IN ACCORDANCE WITH THE OPERATION AND MAINTENANCE MANUAL.
18. INSTALLATIONS OF HVAC, REFRIGERATION AND FIRE SUPPRESSION EQUIPMENT SHALL COMPLY WITH WITH THE REQUIREMENTS OF THE LATEST CMC, HVAC, REFRIGERATION, AND FIRE SUPPRESSION EQUIPMENT SHALL NOT CONTAIN CHLOROFLUOROCARBONS (CFCS) AND ALL SHALL NOT CONTAIN HALONS
19. IN ADDITION TO TESTING AND ADJUSTING, BEFORE A NEW SPACE-CONDITIONING SYSTEM SERVING A BUILDING OR ITS SPACE IS OPERATED FOR NORMAL USE, BALANCE THE SYSTEM IN ACCORDANCE WITH PROCEDURES DEFINED BY THE TESTING ADJUSTING AND BALANCING BUREAU NATIONAL STANDARDS, THE NATURAL ENVIRONMENTAL BALANCING BUREAU PROCEDURES STANDARDS, OR ASSOCIATED AIR BALANCE COUNCIL NATIONAL STANDARDS.
20. PROVIDE THE BUILDING OWNER OR REPRESENTATIVE WITH DETAILED OPERATING AND MAINTENANCE INSTRUCTIONS AND COPIES OF GUARANTEES/WARRANTEES FOR EACH SYSTEM. O&M INSTRUCTIONS SHALL BE CONSISTENT WITH THE LATEST OSHA REQUIREMENTS AND OTHER RELATED REGULATIONS.

HVAC GENERAL NOTES

1. CONTRACTOR SHALL CAREFULLY REVIEW THESE PLANS AND SPECIFICATIONS PRIOR TO BID. CONTRACTOR SHALL ALSO REVIEW PLANS AND SPECIFICATIONS OF OTHER RELATED TRADES (INCLUDING CIVIL, STRUCTURAL, AND ELECTRICAL) PRIOR TO BID TO ENSURE AN ACCURATE UNDERSTANDING OF EXACT SCOPE OF WORK. ANY ITEMS REQUIRING CLARIFICATION SHALL BE BROUGHT TO THE ATTENTION OF THE ARCHITECT IN SUFFICIENT TIME TO BE INCORPORATED INTO THE BID.
2. CONTRACTOR SHALL VERIFY ALL EQUIPMENT MODEL NUMBERS, CAPACITIES, SIZES, VOLTAGES, AND ALL OTHER SCHEDULED INFORMATION WITH ALL OTHER APPLICABLE TRADES AND WITH THE MANUFACTURER PRIOR TO INSTALLATION.
3. CONTRACTOR SHALL VERIFY ALL LOCATIONS, SIZES, P.O.C.'s, AND AVAILABILITY OF ALL EXISTING ITEMS (I.E.: OUTSIDE AIR, CWS & CWR, EXHAUST ETC.) PRIOR TO INSTALLATION OF ANY MATERIAL OR EQUIPMENT.
4. THESE DRAWINGS ARE ESSENTIALLY DIAGRAMMATIC AND ARE NOT INTENDED TO INDICATE ALL NECESSARY OFFSETS OF DUCTWORK AND PIPING. THE CONTRACTOR SHALL INSTALL MATERIAL AND EQUIPMENT IN A MANNER AS TO CONFORM TO STRUCTURE, AVOID OBSTRUCTIONS, PRESERVE HEADROOM, AND KEEP OPENINGS AND PASSAGEWAYS CLEAR. ALL INSTALLATIONS SHALL BE CONSISTENT WITH NORMALLY ACCEPTABLE INDUSTRY STANDARDS. THE CONTRACTOR SHALL NOTIFY THE ENGINEER IN WRITING OF ANY DISCREPANCIES OR CONFLICTS THAT WOULD AFFECT THE SYSTEM PERFORMANCE OR WHICH WOULD INCUR ADDITIONAL COSTS. THIS NOTIFICATION SHALL BE MADE PRIOR TO THE INSTALLATION OF THE ITEMS CONCERNED.
5. NEW AND/OR EXISTING EQUIPMENT INDICATED ON THIS DRAWING IS SHOWN IN APPROXIMATE POSITION(S). CONTRACTOR SHALL FIELD VERIFY ALL EXISTING CONDITIONS INCLUDING EQUIPMENT LOCATIONS, P.O.C.'s AND STRUCTURAL MEMBERS PRIOR TO INSTALLATION. IN ALL CASES, ADEQUATE ACCESS (PER MANUFACTURER'S RECOMMENDATIONS AND CODE COMPLIANCE) FOR MAINTENANCE AND REPLACEMENT OF EQUIPMENT SHALL BE PROVIDED.
6. ALL WORK SHALL BE DONE IN ACCORDANCE WITH ALL APPLICABLE CODES. NOTHING SHOWN IN THE PLANS OR STATED IN THE SPECIFICATIONS IS INTENDED TO INDICATE THAT THE INSTALLATION OF CONNECTIONS OF ANY ITEM OR DEVICE SHOULD BE DONE CONTRARY TO THE MANUFACTURER'S INSTRUCTIONS AND ALL APPLICABLE CODES AND REGULATIONS. THE CONTRACTOR IS RESPONSIBLE TO ENSURE THAT THE INSTALLATION AND CONNECTIONS OF ALL ITEMS AND DEVICES CONFORM TO MANUFACTURER'S INSTRUCTIONS AND TO ALL APPLICABLE CODES AND REGULATIONS.
7. ALL HVAC EQUIPMENT, MATERIAL, AND ALL CONNECTION THERETO SHALL BE INSTALLED COMPLETE PER MANUFACTURER'S INSTRUCTIONS TO PROVIDE A COMPLETE AND FULLY OPERATIONAL SYSTEM.
8. DUCT SIZES INDICATED ON DRAWINGS ARE INSIDE NET CLEARANCE DIMENSIONS.
9. CONTRACTOR MAY, AT HIS OPTION, REVISE DUCTWORK SIZING AND ROUTING TO ALLOW FOR INSTALLATION IN THE AVAILABLE SPACE. DUCTWORK THAT IS RESIZED MUST MAINTAIN THE SAME CROSS-SECTIONAL AREA. FLEX DUCT IS LIMITED TO A MAXIMUM OF 5'-0" AT EACH REGISTER.
10. ALL NEW SUPPLY, RETURN, AND EXHAUST (AIR DISTRIBUTION) GRILLES, REGISTERS, AND DIFFUSERS SHALL MATCH (IF APPLICABLE) EXISTING, AND BE APPROVED BY ARCHITECT. THE MAXIMUM NOISE NC LEVEL SHALL BE 35.
11. ALL SUPPLY, RETURN, AND EXHAUST REGISTER CONNECTIONS TO DUCTWORK SHALL BE PROVIDED WITH ACCESSIBLE MANUAL VOLUME DAMPERS. ALTERNATIVELY, ACCESSIBLE MANUAL VOLUME DAMPERS MAY BE PROVIDED IN DUCT WORK FEEDER LINES SERVING INDIVIDUAL REGISTERS.
12. SUBSTITUTION OF HVAC EQUIPMENT WITH EFFICIENCIES LOWER THAT THOSE INDICATED ON THE PLANS MAY REQUIRE RECALCULATION OF TITLE 24 DOCUMENTS. IF THE CONTRACTOR CHOOSES TO UTILIZE SUCH EQUIPMENT, HE ASSUMES FULL RESPONSIBILITY FOR THE RECALCULATION AND JURISDICTIONAL APPROVAL OF TITLE 24 DOCUMENTS.
13. IF THE CONTRACTOR'S USE OF SUBSTITUTE MATERIALS, EQUIPMENT, OR METHODS OF INSTALLATION REQUIRES ANY CHANGES IN OTHER TRADES WORK FROM THAT SHOWN ON THE DRAWINGS, THE EXTRA COST OF THE OTHER TRADES WORK SHALL BE THE RESPONSIBILITY OF THE CONTRACTOR INITIATING THE SUBSTITUTION.
14. SUBMITTALS: APPROVAL OF SUBMITTALS DOES NOT RELEASE THE CONTRACTOR FROM OBLIGATIONS TO COMPLY WITH ALL REQUIREMENTS OF THE CONSTRUCTION DOCUMENTS OR APPLICABLE CODE REGULATIONS.
15. WHERE NONMETALLIC PIPING PENETRATES AREA SEPARATION WALLS, THE PIPE SECTION PASSING THROUGH THE WALLS AND THE FIXTURE CONNECTIONS THERETO SHALL BE OF METAL ONLY.
16. NO RANGE HOODS, DRYER VENTS, COMBUSTION VENTS, OR HEATING DUCTS ARE PERMITTED IN AREA SEPARATION WALLS.
17. A. CONTRACTOR TO VERIFY LOCATION OF FIRE AND FIRE/SMOKE BARRIER WALLS WITH ARCHITECT PRIOR TO FIRE AND/OR SMOKE DAMPER, DETECTOR AND ACTUATOR INSTALLATION.
    B. ALL CEILING FIRE DAMPERS TO BE ONE (1) HOUR U.L. AND C.S.F.M. APPROVED.
    C. ALL FIRE RATED WALLS SHALL BE PROVIDED WITH U.L. AND C.S.F.M. APPROVED SMOKE/FIRE DAMPERS (EQUAL TO WALL RATING), MOTOR, ACTUATOR, AND SMOKE DETECTOR.
    D. ALL SMOKE BARRIER WALLS SHALL BE PROVIDED WITH U.L. AND C.S.F.M. APPROVED SMOKE/FIRE DAMPERS (EQUAL TO WALL RATING), MOTOR, ACTUATOR, AND SMOKE DETECTOR.
    E. ALL PENETRATIONS OF ONE (1) HOUR CORRIDOR WALLS AND CEILINGS THAT WOULD REQUIRE THE INSTALLATION OF A FIRE DAMPER SHALL BE APPROVED WITH A U.L. AND C.S.F.M. APPROVED COMBINATION SMOKE/FIRE DAMPER, (EQUAL TO WALL RATING), MOTOR, ACTUATOR, AND SMOKE DETECTOR.
    F. PROVIDE ALL FIRE & SMOKE DAMPERS WITH ACCESS DOORS AS NECESSARY.

HVAC PERFORMANCE CRITERIA

1. THE INTENT OF THIS PERFORMANCE CRITERIA IS TO DEFINE THE LEVEL OF PERFORMANCE THAT WILL BE PROVIDED BY THE COMPLETED HVAC SYSTEM AND TO DESCRIBE THE BASIC PARAMETERS USED IN THE DESIGN TO ENSURE THAT LEVEL OF PERFORMANCE AS INDICATED IN BASIS OF DESIGN.
2. OUTDOOR DESIGN PARAMETERS:
   SAN DIEGO, CALIFORNIA
   CALIFORNIA CLIMATE ZONE: 10
   ASHRAE CLIMATE ZONE:X

   SUMMER DESIGN CONDITIONS (ASHRAE-X 0.5%)
   90 DEG F - DRYBULB
   70 DEG F - WETBULB
   20 DEG F - DAILY RANGE
   92 DEG F - AIR COOLED EQUIPMENT DESIGN REQUIREMENT-DRYBULB

   WINTER DESIGN CONDITIONS (ASHRAE-X 0.2%)
   31 DEG F - DRYBULB
3. INDOOR DESIGN PARAMETERS:

SPACE	COOLING	HEATING	RELATIVE HUMIDITY	MIN. FILTRATION	MAX VENTILATION
KITCHEN	NA	68 +/-2	10-70% (NOT CONTROLLED)	NA	NA

MECHANICAL LEGEND

SYMBOL	ABBREV	DESCRIPTION	ABBREV	DESCRIPTION	ABBREV	DESCRIPTION
	POD	POINT OF DISCONNECTION	GA	GAUGE	V / PH / HZ	VOLTS / PHASE / HERTZ
	POC	POINT OF CONNECTION	GALV	GALVANIZED	VAV	VARIABLE AIR VOLUME
		REMOVE EXISTING EQUIPMENT OR PIPES SHOWN HATCHED	GI	GRAVITY INTAKE	VFD	VARIABLE FREQUENCY DRIVE
		DUCT WITH ACOUSTIC DUCT LINER	GM	GAS METER	VOL	VOLUME
		DUCT SECTION - SUPPLY	GPH	GALLONS PER HOUR	VTR	VENT THRU ROOF
		DUCT SECTION - RETURN	GPM	GALLONS PER MINUTE	W /	WITH
		DUCT SECTION - EXHAUST	GR	GRADE	WT	WEIGHT
	SAD	SUPPLY AIR DIFFUSER	GR	GRAVITY RELIEF		
	RAG	RETURN AIR GRILLE	GV	GRAVITY VENTILATOR		
	EAG	EXHAUST AIR GRILLE	HD	HEAD		
	DU/UC	DOOR LOUVER OR UNDERCUT	HDR	HEADER		
	AP	ACCESS PANEL	HOA	HAND - OFF - AUTOMATIC		
(T)		ROOM THERMOSTAT AND ZONE NUMBER/TEMPERATURE SENSOR	HP	HORSEPOWER		
(CO)		ROOM CARBON MONOXIDE SENSOR	HR	HOUR		
(CO2)		ROOM CARBON DIOXIDE SENSOR	IN W.C.	INCHES WATER COLUMN		
(SD)	SD	DUCT SMOKE DETECTOR	KW	KILOWATT		
(TP)	TP	TEST PORT	LAT	LEAVING AIR TEMPERATURE		
		PIPE DOWN	LBS	POUNDS		
		PIPE UP	MA	MAKE-UP AIR		
		PIPE BRANCH-TOP CONNECTION	MAX	MAXIMUM		
		PIPE BRANCH-BOTTOM CONNECTION	MCA	MAXIMUM CIRCUIT AMPERAGE		
		SUT-OFF VALVE IN RISE OR DROP	MECH	MECHANICAL		
—CP—	CP	CONDENSATE PUMP DISCHARGE	MFR	MANUFACTURER		
—CD—	CD	CONDENSATE DRAIN	MIN	MINIMUM		
—D—	D	DRAIN	MOCP	MAXIMUM OVER-CURRENT PROTECTION		
	BV	BALL VALVE	MTD	MOUNTED		
	BFV	BUTTERFLY VALVE	(N)	NEW		
	ABV	ABOVE	NC	NORMALLY CLOSED		
	AFF	ABOVE FINISHED FLOOR	N.I.C.	NOT IN CONTRACT		
	AFG	ABOVE FINISHED GRADE	NO	NUMBER		
	AHU	AIR HANDLING UNIT	NO	NORMALLY OPEN		
	AOR	ARCHITECT OF RECORD	NTS	NOT TO SCALE		
	AP	ACCESS PANEL	OA	OUTSIDE AIR		
	ARCH	ARCHITECT OR ARCHITECTURAL	PSI	POUNDS PER SQUARE INCH		
	B / F	BELOW FLOOR	PSIG	POUNDS PER SQUARE INCH GAUGE		
	B / G	BELOW GRADE	QTY	QUANTITY		
	B / S	BELOW SLAB	RA	RETURN AIR		
	BEL	BELOW	RAG	RETURN AIR GRILLE		
	BTU	BRITISH THERMAL UNITS	RAR	RETURN AIR REGISTER		
	BTUH	BRITISH THERMAL UNITS PER HOUR	RF	RETURN FAN		
	CA	COMBUSTION AIR	RFI	REQUEST FOR INFORMATION		
	CD	CEILING DIFFUSER	RFP	REQUEST FOR PROPOSAL		
	CFM	CUBIC FEET PER MINUTE	SA	SUPPLY AIR		
	CLG	CEILING	SAG	SUPPLY AIR GRILLE		
	CLR	CLEAR	SAR	SUPPLY AIR REGISTER		
	CMU	CONCRETE MASONRY UNIT	SF	SUPPLY FAN		
	CONC	CONCRETE	SHT	SHEET		
	CONN	CONNECT OR CONNECTION	SOV	SHUT OFF VALVE		
	CONT	CONTINUATION	SS	STAINLESS STEEL		
	CONTR	CONTRACTOR	STRUCT	STRUCTURAL		
	CU	CONDENSING UNIT	TEMP	TEMPERATURE		
	DB	DRY BULB	TYP	TYPICAL		
	DEGF	DEGREE FAHRENHEIT	UNO	UNLESS NOTED OTHERWISE		
	DN	DOWN	UTR	UP THRU ROOF		
	DTR	DOWN THRU ROOF				
	DWGS	DRAWINGS				
	(E)	EXISTING				
	EA	EXHAUST AIR				
	EAG	EXHAUST AIR GRILLE				
	EAT	ENTERING AIR TEMPERATURE				
	EF	EXHAUST FAN				
	ELECT	ELECTRICAL				
	ELEV	ELEVATION				
	ESP	EXTERNAL STATIC PRESSURE				
	FLR	FLOOR				
	FPM	FEET PER MINUTE				
	FT	FEET OR FOOT				
	FUT	FUTURE				

DIFFUSER / REGISTER OR GRILLE TYPE
- DIFFUSER / REGISTER TYPE
- AIR QUANTITY (CFM)

EQUIPMENT IDENTIFICATION SYMBOL
- EQUIPMENT TYPE
- EQUIPMENT IDENTIFIER

SAV/EAV/FC IDENTIFICATION SYMBOL
- EQUIP TYPE
- 2.1.1
  - NUMBERING SEQUENCE
  - FLOOR
  - ASSOCIATED AHU / EF / VRF

(M) FURNISHED AND INSTALLED BY MECHANICAL

(ME) FURNISHED BY MECHANICAL AND INSTALLED BY ELECTRICAL

(E) FURNISHED AND INSTALLED BY ELECTRICAL

ALPHASTUDIO DESIGN GROUP
6152 INNOVATION WAY
CARLSBAD, 92009
760-431-2444
www.alphastudio-design.com

ARCHITECT OF RECORD

ENGINEER OF RECORD

DEC ENGINEERS
10150 MEANLEY DRIVE STE 250
SAN DIEGO, CA 92131
P: 858 578.3270 F: 858 578.3273

CENTRAL KITCHEN IMPROVEMENTS

LAKESIDE UNION SCHOOL DISTRICT

12335 WOODSIDE AVE
LAKESIDE, CA 92040

LAKESIDE UNION SCHOOL DISTRICT
12335 WOODSIDE AVE LAKESIDE CA 92040

REVISIONS

MARK	DATE	DESCRIPTION

PROJECT NO: #PIn

MODEL FILE:
23-002 LUSD Central Kitchen Improvements_Draft_23-03-17.pln

PLOT DATE:
4/26/2023

SHEET TITLE

MECHANICAL NOTES AND LEGEND

M001

© 2020 Architects Gallegos + Eckle inc. dba AlphaStudio Design Group

T:\ASDG Projects\Active Projects\23-002 LUSD Central Kitchen Improvements\23-002 LUSD Central Kitchen Improvements_Draft_23-03-17.pln

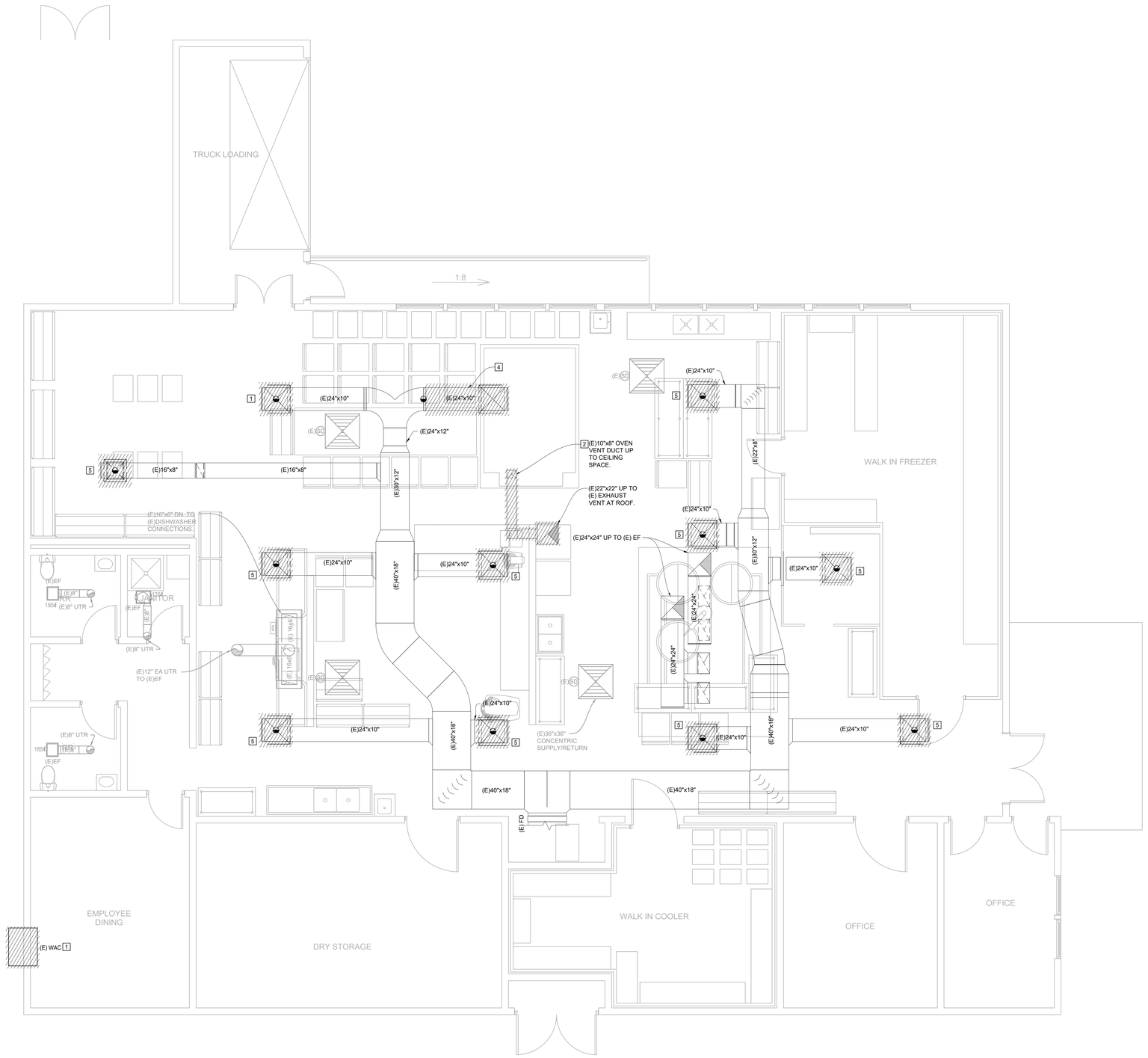

1 MECHANICAL DEMOLITION FLOOR PLAN

SCALE: 1/4" = 1'-0"

4' 2' 0' 4' 8'
1/4" = 1' - 0"

SHEET NOTES

1. DISCONNECT AND REMOVE EXISTING WALL AC UNIT. PATCH AND REPAIR EXISTING OPENING WITH LIKE3 MATERIALS, SEE ARCHITECTURAL FOR FINISH.
2. DISCONNECT EXISTING OVEN VENT DUCT TO POINT OF DISCONNECT SHOWN.
3. DISCONNECT AND REMOVE EXISTING OVEN EXHAUST VENT UP TO ROOF.
4. DISCONNECT AND REMOVE EXISTING SUPPLY DUCT AND DIFFUSER TO POINT OF DISCONNECT SHOWN.
5. DISCONNECT AND REMOVE THE SUPPLY DIFFUSER FROM POD SHOWN.

PRE-TAB NOTE

PRIOR TO DEMOLITION, PROVIDE PRE-TAB OF ALL SUPPLY AIR DIFFUSERS ASSOCIATED WITH THE EXISTING MAKE-UP AIR SYSTEM INCLUDING THE EQUIPMENT LOCATED WITHIN THE MECHANICAL PENTHOUSE AND THE (4) ROOFTOP MOUNTED HEAT PUMPS.

ALPHASTUDIO DESIGN GROUP

6152 INNOVATION WAY
CARLSBAD, 92009
760-431-2444
www.alphastudio-design.com

ARCHITECT OF RECORD

ENGINEER OF RECORD

DEC ENGINEERS
10150 MEANLEY DRIVE STE 250
SAN DIEGO, CA 92131
P: 858 578.3270 F: 858 578.3273

CENTRAL KITCHEN IMPROVEMENTS

LAKESIDE UNION SCHOOL DISTRICT

12335 WOODSIDE AVE
LAKESIDE, CA 92040

LAKESIDE UNION SCHOOL DISTRICT
12335 WOODSIDE AVE LAKESIDE CA 92040

REVISIONS

MARK	DATE	DESCRIPTION

PROJECT NO: #PIn

MODEL FILE:
23-002 LUSD Central Kitchen Improvements_Draft_23-03-17.pln

PLOT DATE:
4/26/2023

SHEET TITLE

MECHANICAL DEMOLITION FLOOR PLAN

MD101

© 2020 Architects Gallegos + Eckle Inc. dba AlphaStudio Design Group

T:\ASDG Projects\Active Projects\23-002 LUSD Central Kitchen Improvements\23-002 LUSD Central Kitchen Improvements_Draft_23-03-17.pln

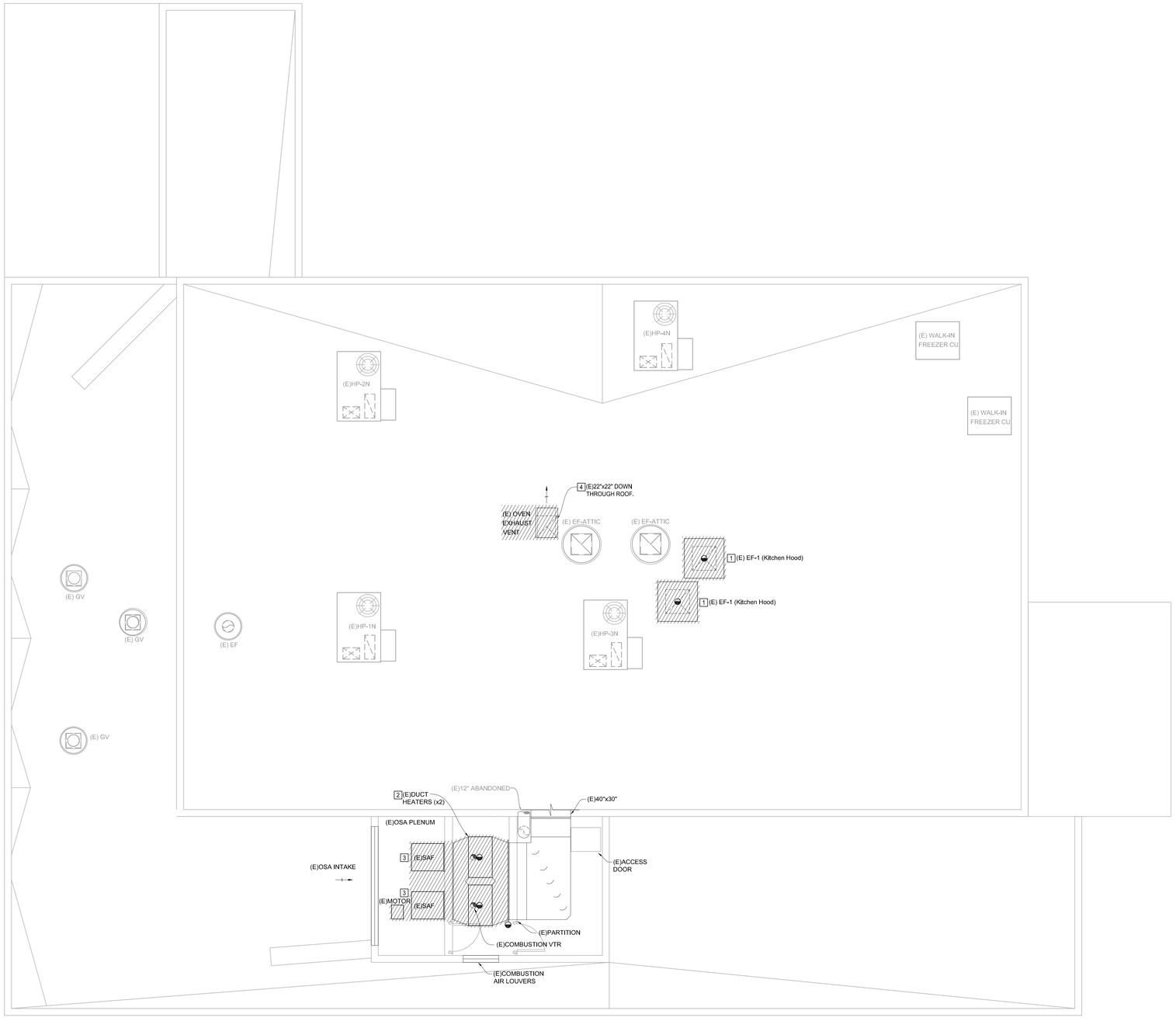

1 MECHANICAL DEMOLITION ROOF PLAN

SCALE: 1/4" = 1'-0"

4' 2' 0' 4' 8'

1/4" = 1' - 0"

DEMOLITION NOTES

1. DISCONNECT AND REMOVE EXISTING EXHAUST FAN AND ALL ASSOCIATED APPURTENANCES INCLUDING EXISTING ROOF CURB. NEW EXHAUST FAN TO RECONNECT TO EXISTING DUCTWORK. SEE NEW WORK ROOF PLAN.
2. WITHIN MECHANICAL PENTHOUSE DISCONNECT AND REMOVE EXISTING DUCT FURNACE AND ALL ASSOCIATED APPURTENANCES TO POINT OF DISCONNECT SHOWN. NEW DUCT FURNACE TO RECONNECT TO EXISTING DUCTWORK. SEE NEW WORK ROOF PLAN.
3. WITHIN MECHANICAL PENTHOUSE DISCONNECT AND REMOVE EXISTING SUPPLY FANS AND ALL ASSOCIATED APPURTENANCES.
4. DISCONNECT AND REMOVE EXISTING OVEN EXHAUST VENT AT ROOF AND ALL ASSOCIATED APPURTENANCES. PATCH AND REPAIR OPENING WITH LIKE MATERIALS.

ALPHASTUDIO DESIGN GROUP

6152 INNOVATION WAY
CARLSBAD, 92009
760-431-2444
www.alphastudio-design.com

ARCHITECT OF RECORD

ENGINEER OF RECORD

DEC ENGINEERS
10150 MEANLEY DRIVE STE 250
SAN DIEGO, CA 92131
P: 858 578.3270 F: 858 578.3273

CENTRAL KITCHEN IMPROVEMENTS

LAKESIDE UNION SCHOOL DISTRICT

12335 WOODSIDE AVE
LAKESIDE, CA 92040

LAKESIDE UNION SCHOOL DISTRICT
12335 WOODSIDE AVE LAKESIDE CA 92040

REVISIONS

MARK	DATE	DESCRIPTION

PROJECT NO: #PIn

MODEL FILE:
23-002 LUSD Central Kitchen Improvements_Draft_23-03-17.pln

PLOT DATE:
4/26/2023

SHEET TITLE

MECHANICAL DEMOLITION ROOF PLAN

MD102

SHEET NOTES

1. PROVIDE NEW DUCTED FAN COIL UNIT PER SCHEDULE.
2. 14"x14" S.S. GREASE DUCT DOWN FROM KEF-2 ON ROOF, CONNECT TO KITCHEN HOOD INLET PER FOOD SERVICE.
3. 16"x16" S.S. GREASE DUCT DOWN FROM KEF-1 ON ROOF, CONNECT TO KITCHEN HOOD INLET PER FOOD SERVICE.
4. CONNECT TO KITCHEN HOOD INLET PER FOOD SERVICE PLANS.
5. RECONNECT TO EXISTING SUPPLY DUCT.
6. FURNISH AND INSTALL NEW SUPPLY DIFFUSERS PER MECHANICAL SCHEDULES AND RECONNECT TO THE EXISTING SUPPLY DUCT AT THE POC SHOWN.

GENERAL NOTES

EXISTING DUCTWORK CLEANED, SEALED, AND PROTECTED IN PLACE.

ALL EXISTING EQUIPMENT, DUCTWORK, DIFFUSER, AND ACCESSORIES SHOWN ARE EXISTING, BASED ON RECORD FILES. PRIOR TO BID FIELD VERIFY LOCATION, QUANTITY AND SIZES. IF THERE ARE ANY DISCREPANCIES BETWEEN DRAWINGS AND ACTUAL EXISTING CONDITIONS IT SHALL BE BROUGHT TO THE ATTENTION OF THE ARCHITECT OF RECORD IN SUFFICIENT TIME TO BE INCORPORATED INTO BID DOCUMENTS.

PRIOR TO DEMOLITION , COORDINATE ELECTRICAL POWER DISCONNECT WITH ELECTRICAL CONTRACTOR AND CONTROLS WITH CONTROL CONTRACTOR.

AVOID CUTTING ANY STRUCTURAL MEMBERS UNLESS SHOWN ON STRUCTURAL DRAWINGS.

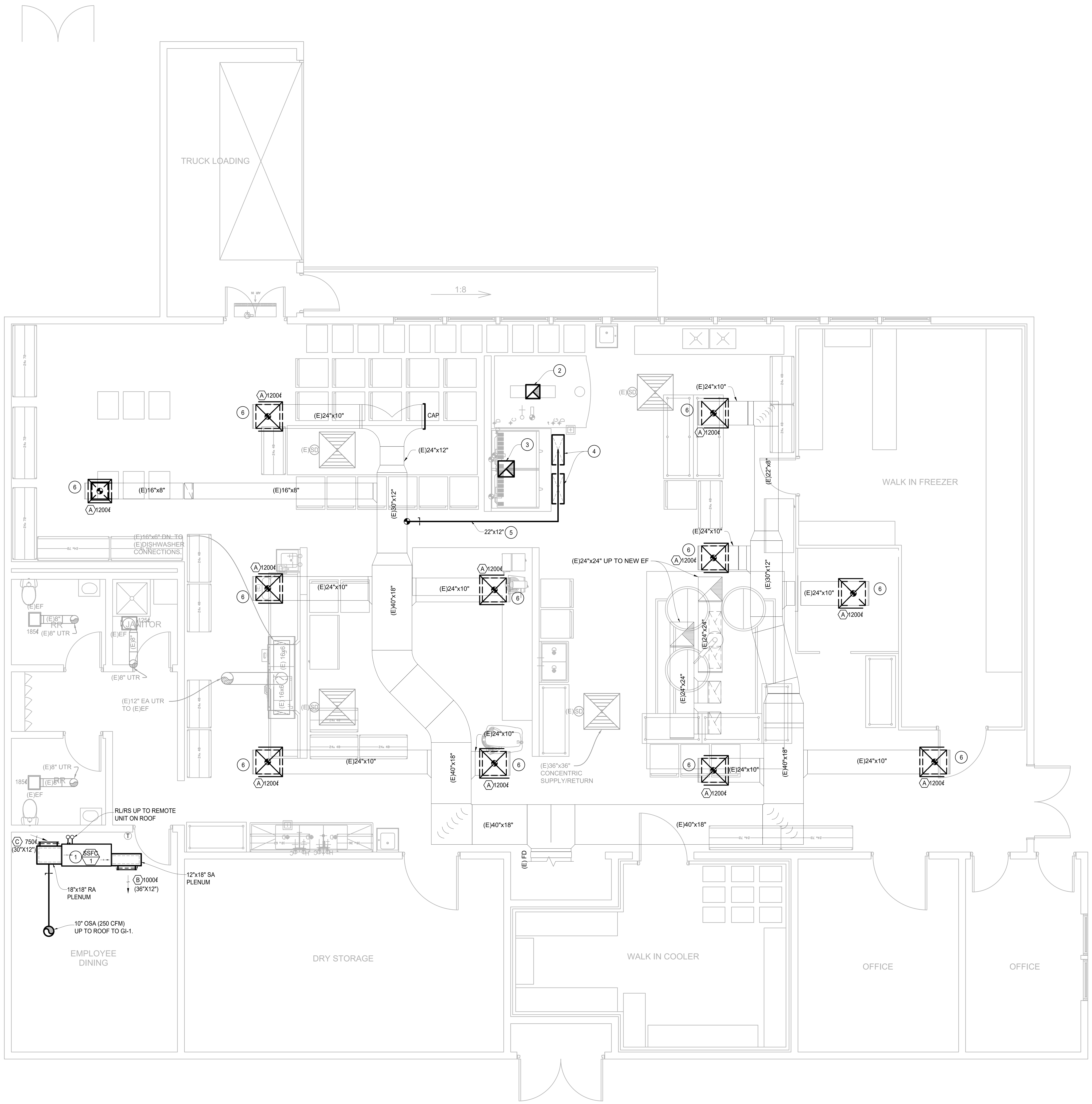

1 MECHANICAL NEW WORK FLOOR PLAN

SCALE: 1/4" = 1'-0"

© 2020 Architects Gallegos + Eckle inc. dba AlphaStudio Design Group

T:\ASDG Projects\Active Projects\23-002 LUSD Central Kitchen Improvements\23-002 LUSD Central Kitchen Improvements_Draft_23-03-17.pln

ALPHASTUDIO DESIGN GROUP
6152 INNOVATION WAY
CARLSBAD, 92009
760-431-2444
www.alphastudio-design.com

ARCHITECT OF RECORD

ENGINEER OF RECORD

CENTRAL KITCHEN IMPROVEMENTS

LAKESIDE UNION SCHOOL DISTRICT

12335 WOODSIDE AVE
LAKESIDE, CA 92040

LAKESIDE UNION SCHOOL DISTRICT
12335 WOODSIDE AVE LAKESIDE CA 92040

REVISIONS

MARK	DATE	DESCRIPTION

PROJECT NO: #Pln

MODEL FILE: 23-002 LUSD Central Kitchen Improvements_Draft_23-03-17.pln

PLOT DATE: 4/26/2023

SHEET TITLE

MECHANICAL NEW WORK FLOOR PLAN

M101

© 2020 Architects Gallegos + Eckle Inc. dba AlphaStudio Design Group

T:\ASDG Projects\Active Projects\23-002 LUSD Central Kitchen Improvements\23-002 LUSD Central Kitchen Improvements_Draft_23-03-17.pln

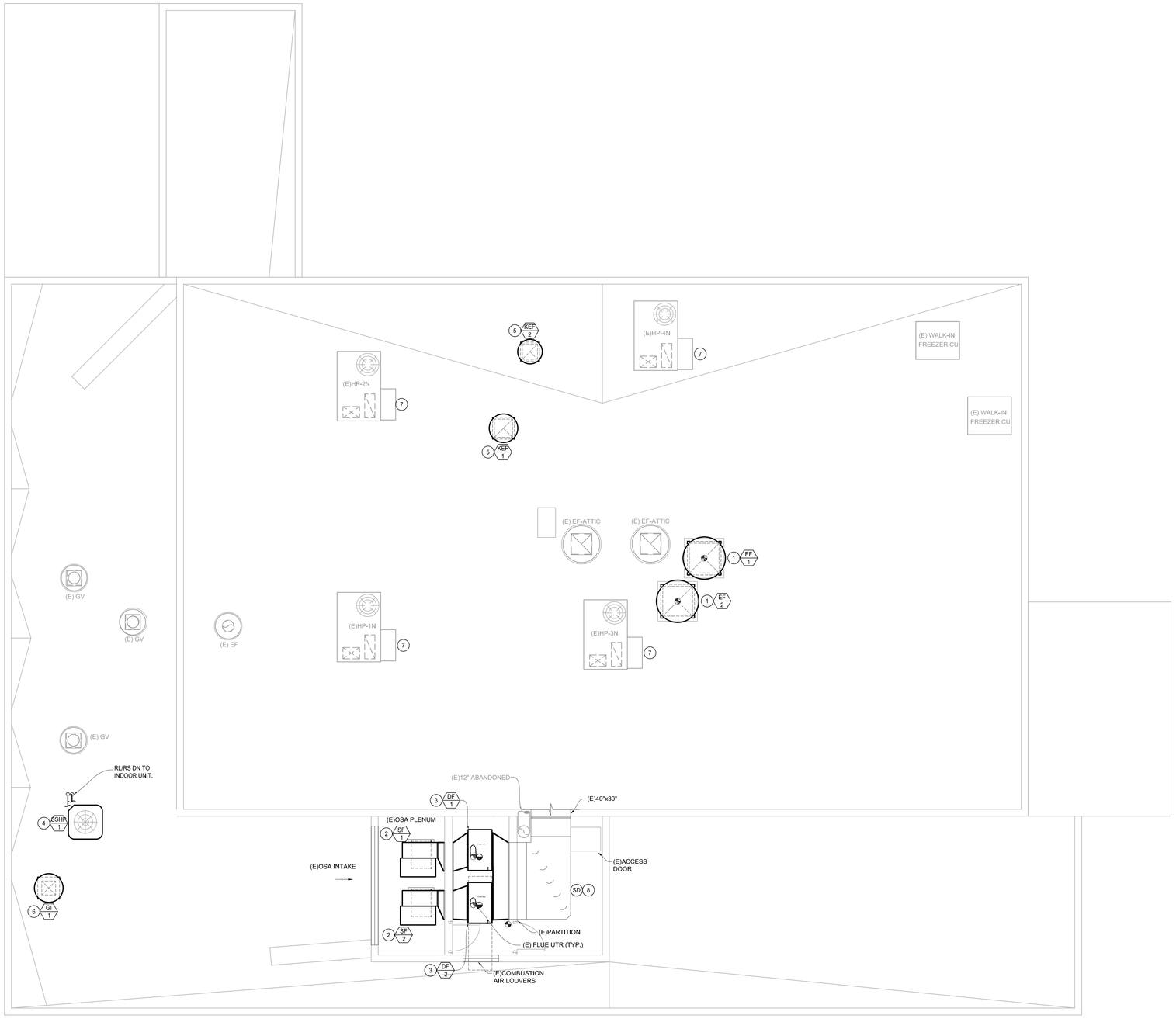

1 MECHANICAL NEW WORK ROOF PLAN

SCALE: 1/4" = 1'-0"

4' 2' 0' 4' 8'

1/4" = 1' - 0"

SHEET NOTES

1. PROVIDE NEW EXHAUST FAN PER SCHEDULE. RECONNECT TO EXISTING DUCTWORK AT ROOF LEVEL. PATCH AND REPAIR ROOF PER ARCHITECTURAL PLANS.
2. PROVIDE NEW SUPPLY FAN PER SCHEDULE. PROVIDE NEW DUCT FULL SIZE FROM SUPPLY FAN OUTLET AND CONNECT WITH TRANSITION TO DUCT FURNACE INLET.
3. PROVIDE NEW DUCT FURNACE PER SCHEDULE. PROVIDE NEW DUCT FULL SIZE FROM DUCT FURNACE OUTLET AND RECONNECT WITH TRANSITION TO EXISTING DUCT AT POINT OF CONNECTION SHOWN. EXTEND FLUE AND RECONNECT TO EXISTING VENT UTR WITHIN MECHANICAL PENTHOUSE.
4. PROVIDE NEW REMOTE OUTDOOR UNIT PER SCHEDULE.
5. PROVIDE NEW EXHAUST FAN PER SCHEDULE.
6. PROVIDE NEW GRAVITY INTAKE HOOD PER SCHEDULE.
7. VENTILATION AIR TO BE PROVIDED BY 100% OUTSIDE AIR MAKE-UP AIR SYSTEM. SEAL ALL OUTSIDE AIR HOODS CLOSED SHUT. EXISTING ROOFTOP PACKAGE HEAT PUMPS TO BE UTILIZED FOR SPACE COOLING ONLY NO OSA REQUIRED.
8. PROVIDE NEW DUCT MOUNTED SMOKE DETECTOR FOR AUTOMATIC SHUTOFF OF MAU SYSTEM (SF-1 & SF-2) PER CMC 609.1.

ALPHASTUDIO DESIGN GROUP

6152 INNOVATION WAY
CARLSBAD, 92009
760-431-2444
www.alphastudio-design.com

ARCHITECT OF RECORD

ENGINEER OF RECORD

DEC ENGINEERS
10150 MEANLEY DRIVE STE 250
SAN DIEGO, CA 92131
P: 858 578.3270 F: 858 578.3273

CENTRAL KITCHEN IMPROVEMENTS

LAKESIDE UNION SCHOOL DISTRICT

12335 WOODSIDE AVE
LAKESIDE, CA 92040

LAKESIDE UNION SCHOOL DISTRICT
12335 WOODSIDE AVE LAKESIDE CA 92040

REVISIONS

MARK	DATE	DESCRIPTION

PROJECT NO: #Pln

MODEL FILE:
23-002 LUSD Central Kitchen Improvements_Draft_23-03-17.pln

PLOT DATE:
4/26/2023

SHEET TITLE

MECHANICAL NEW WORK ROOF PLAN

M102

© 2020 Architects Gallegos + Eckle Inc. dba AlphaStudio Design Group

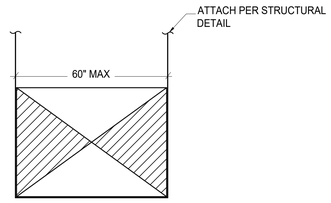

NOTE:
MAX DUCT WIDTH. 60" AND LESS THAN 6 SQ.FT. TOTAL W/ HANGER SPACING 10' MAX EXPOSED AND CONCEALED DUCT

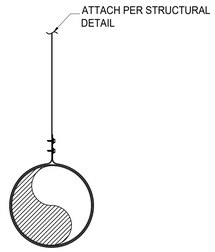

NOTE:
MAX DUCT DIA. 24" W/ HANGER SPACING 10' MAX EXPOSED AND CONCEALED DUCT

SEISMIC BRACING

1. ALL DUCT SUPPORT AND STRAPPING SHALL BE PER THE LATEST EDITION OF SMANCE HVAC DUCT CONSTRUCTION STANDARDS.
2. SEISMIC BRACING IS REQUIRED AND SHALL CONFORM TO OPM#-0043-13.

DUCT HANGER STRAPPING

SCALE	
NONE	7

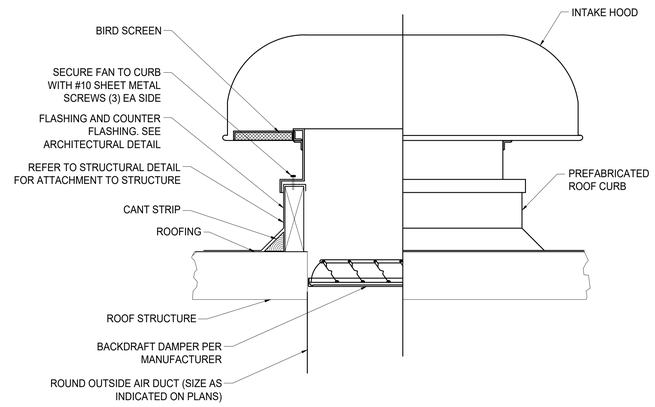

ROOF GRAVITY INTAKE HOOD

SCALE	
NONE	4

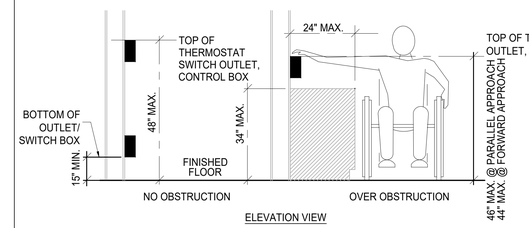

ELEVATION VIEW

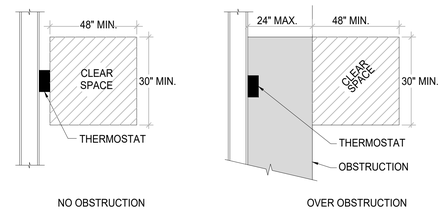

PLAN VIEW

THERMOSTAT NOTE:

1. ALL THERMOSTATS MUST BE INSTALLED PER DETAIL ABOVE. IF AN EXISTING OBSTRUCTION EXISTS THAT PREVENTS THE THERMOSTAT TO BE INSTALLED PER THE DETAIL, THE OBSTRUCTION MUST EITHER BE REMOVED OR THE THERMOSTAT RELOCATED. PER 2022 CBC.
2. ENSURE THAT ALL WIRING IS EXTENDED PER LOCATION OF INSTALLED THERMOSTAT.
3. NO DOOR SWING SHALL ENCROACH CLEAR SPACE.
4. FORWARD OR FRONT APPROACH FOR DEVICES MOUNTED ABOVE COUNTERS ASSUMES THAT DIRECTLY BELOW THE DEVICE, THE COUNTER HAS A 30" MIN. WIDE x 27" MIN. HIGH x 19" MIN. DEEP CLEAR OPENING.
5. OBSTRUCTED FORWARD APPROACH ONLY AT ACCESSIBLE WORK STATIONS WITH COMPLYING KNEE/TOE SPACE.

THERMOSTAT MOUNTING HEIGHT

SCALE	
NONE	1

ALPHASTUDIO DESIGN GROUP
6152 INNOVATION WAY
CARLSBAD, 92009
760-431-2444
www.alphastudio-design.com

ARCHITECT OF RECORD

ENGINEER OF RECORD

DEC ENGINEERS
10150 MEANLEY DRIVE STE 250
SAN DIEGO, CA 92131
P: 858 578.3270 F: 858 578.3273

-

SCALE	
NONE	8

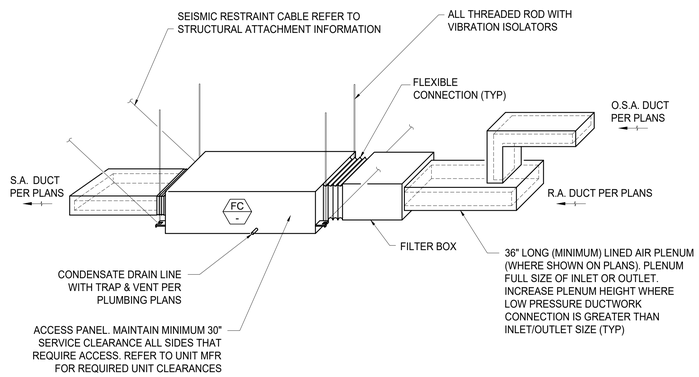

TYPICAL FAN COIL UNIT DETAIL

SCALE	
NONE	5

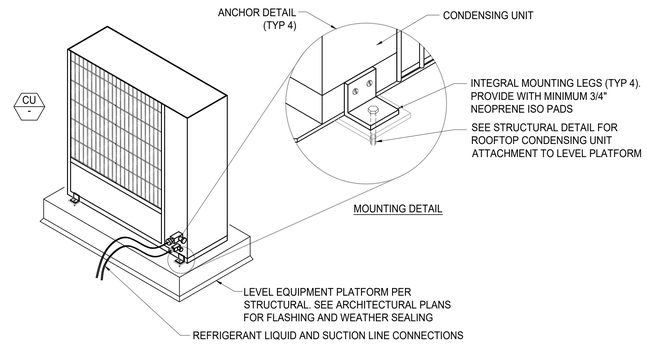

NOTES

1. REFER TO MANUFACTURER'S INSTRUCTIONS FOR EXACT CLEARANCE REQUIREMENTS.

CONDENSING UNIT MOUNTING

SCALE	
NONE	2

-

SCALE	
NONE	9

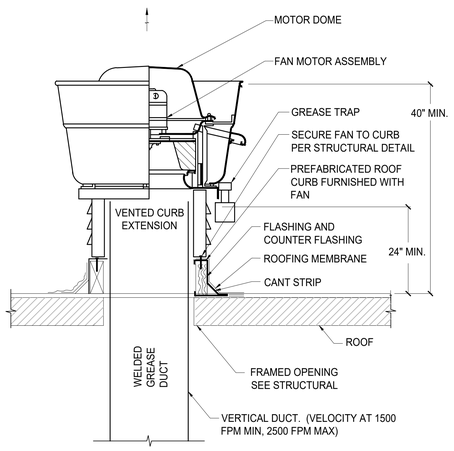

NOTE:

ELECTRICAL CONTRACTOR SHALL PROVIDE CONDUIT AND WIRES TO INTERLOCK EXHAUST FANS WITH MAKE-UP AIR UNIT. ELECTRICAL CONTRACTOR SHALL PROVIDE ONE 115V SWITCH NEXT TO HOOD IN KITCHEN TO CONTROL HOOD FAN. VERIFY LOCATION WITH MECHANICAL CONTRACTOR.

UP-BLAST KITCHEN EXHAUST FAN

SCALE	
NONE	6

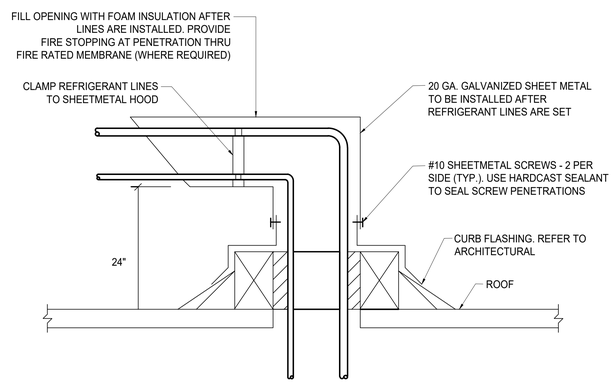

REFRIGERANT LINE ROOF PENETRATION

SCALE	
NONE	3

CENTRAL KITCHEN IMPROVEMENTS

LAKESIDE UNION SCHOOL DISTRICT

12335 WOODSIDE AVE
LAKESIDE, CA 92040

LAKESIDE UNION SCHOOL DISTRICT
12335 WOODSIDE AVE LAKESIDE CA 92040

REVISIONS

MARK	DATE	DESCRIPTION

PROJECT NO: #PIn

MODEL FILE:
23-002 LUSD Central Kitchen Improvements_Draft_23-03-17.pln

PLOT DATE:
4/26/2023

SHEET TITLE

MECHANICAL DETAILS

M501

T:\ASDG Projects\Active Projects\23-002 LUSD Central Kitchen Improvements\23-002 LUSD Central Kitchen Improvements_Draft_23-03-17.pln

© 2020 Architects Gallegos + Eckle Inc. dba AlphaStudio Design Group

T:\ASDG Projects\Active Projects\23-002 LUSD Central Kitchen Improvements\23-002 LUSD Central Kitchen Improvements_Draft_23-03-17.pln

ROOFTOP PACKAGED HEAT PUMP SCHEDULE (FOR REFERENCE ONLY)

MARK	LOCATION	MANUFACTURER & MODEL	SERVING	CFM	OSA CFM	E.S.P. (in. wg)	COOLING				HEATING		COMP'R		COND. FAN		EVAP. FAN			VOLTAGE	MCA / MOCP	SEER	WEIGHT (lbs.)	REMARKS
							NOMINAL TONS	TOTAL MBH	SENSIBLE MBH	AMB	TOTAL MBH	AMB	QTY.	RLA	QTY.	FLA	QTY.	BHP	FLA					
(E)HP-1N	ROOF	CARRIER 50GCQM06	BUILDING D KITCHEN	2000	0	0.5	5	62.3	49.1	95°F	55.9	47°F	1	16.5	1	1.5	1	0.54	8.6	208/3ϕ/60	31 / 45	16.2	672	-
(E)HP-2N	ROOF	CARRIER 50GCQM06	BUILDING D KITCHEN	2000	0	0.5	5	62.3	49.1	95°F	55.9	47°F	1	16.5	1	1.5	1	0.54	8.6	208/3ϕ/60	31 / 45	16.2	672	-
(E)HP-3N	ROOF	CARRIER 50GCQM06	BUILDING D KITCHEN	2000	0	0.5	5	62.3	49.1	95°F	55.9	47°F	1	16.5	1	1.5	1	0.54	8.6	208/3ϕ/60	31 / 45	16.2	672	-
(E)HP-4N	ROOF	CARRIER 50GCQM06	BUILDING D KITCHEN	2000	0	0.5	5	62.3	49.1	95°F	55.9	47°F	1	16.5	1	1.5	1	0.54	8.6	208/3ϕ/60	31 / 45	16.2	672	-

DUCTED SPLIT SYSTEM SCHEDULE

MARK	MANUFACTURER & MODEL NO.	SERVICE	TYPE	LOCATION	TOTAL COOLING @AHRI (BTUH)	TOTAL HEATING CAPACITY (BTUH)	SEER (EER)	SUPPLY CFM	OSA CFM	ELECTRICAL DATA			REFRIGERANT	OPERATING WEIGHT (LBS)	REMARKS
										V/PH/HZ	MCA	MOCP			
SSFC 1	CARRIER FX4D	STAFF LOUNGE	DUCTED FAN COIL	SUSPENDED	27,160	20,480	15.2 (12.0)	1,000	250	208/1/60	5.1	15.0	R410A	160	1 2 3 4
SSCU 1	CARRIER 25SPA		OUTDOOR CONDENSER	ROOF							18.2	30.0		230	4 5 6

REMARKS:

1. PROVIDE WITH UNIT MANUFACTURER'S HARDWIRED 7-DAY PROGRAMMABLE THERMOSTAT FOR CONTROL. PROVIDE SEPARATE THERMOSTAT TO MONITOR SPACE TEMPERATURE BY EMS.
2. PROVIDE UNIT WITH REFRIGERANT LINE SET.
3. PROVIDE INDOOR UNIT WITH OVERFLOW CONDENSATE SWITCH AT SECONDARY CONDENSATE CONNECTION.
4. SEPARATE POINT OF POWER FOR INDOOR/OUTDOOR UNIT. PROVIDE ALL WIRING PER ELECTRICAL REQUIREMENTS FROM CONDENSING UNIT TO FAN COIL UNIT REFER TO ELECTRICAL PLANS FOR DETAILS. WIRING IS NOT PROVIDED BY THE MANUFACTURER. ELECTRICAL CONTRACTOR TO PROVIDE.
5. PROVIDE WITH COATING PROTECTION ON OUTDOOR CONDENSING COIL AND OUTDOOR CABINET. PROVIDE COATING WITH MINIMUM 6000-HR SALT SPRAY TEST PER ASTM B115. FIELD APPLIED COATINGS NOT ACCEPTABLE.
6. PROVIDE WITH NEOPRENE PADS AT OUTDOOR UNIT, MOUNTED TO LEVEL EQUIPMENT PLATFORM PER STRUCTURAL.

EXHAUST FAN SCHEDULE

MARK	MANUFACTURER & MODEL NO.	LOCATION	SERVICE	TYPE	PERFORMANCE DATA			FAN MOTOR DATA		FAN ELCETRICAL	OPER. WT. (LBS.)	REMARKS
					AIRFLOW (CFM)	ESP (IN.)	FAN RPM	DRIVE	HP	V/PH/HZ		
EF 1	GREENHECK CUE-240-VG	ROOF	EXISTING KITCHEN HOOD	UPBLAST ROOF MOUNTED	4,950	0.25	626	DIRECT	2	208 / 3 / 60	280	1 2 3 4 5
EF 2	GREENHECK CUE-240-VG	ROOF	EXISTING KITCHEN HOOD	UPBLAST ROOF MOUNTED	4,950	0.25	626	DIRECT	2	208 / 3 / 60	280	1 2 3 4 5
KEF 1	GREENHECK CUE-140-VG	ROOF	NEW KITCHEN HOOD	UPBLAST ROOF MOUNTED	1,600	1.50	1600	DIRECT	1	208 / 3 / 60	165	1 2 3 4 5
KEF 2	GREENHECK CUE-100-VG	ROOF	NEW KITCHEN HOOD	UPBLAST ROOF MOUNTED	1,000	1.0	1640	DIRECT	1/4	115/ 1 / 60	105	1 2 3 4 5

1. EC MOTOR WITH MOTOR MOUNTED SPEED CONTROLLER.
2. IINTERLOCK V/A ELECTRICAL HARDWIRE RELAY. REFER TO MAKE UP AIR FAN UNIT SCHEDULE FOR ASSOCIATED SYSTEM.
3. EQUIPMENT ELECTRICAL SUPPLY VOLTAGES COORDINATED WITH ELECTRICAL ENGINEER. REFER TO ELECTRICAL PLANS FOR DETAILS.
4. REFER TO ELECTRICAL PLANS FOR STARTER SPECIFICATIONS AND REQUIREMENTS. REFER TO CONTROLS PLANS FOR FAN OPERATION.
5. PROVIDE WITH MANUFACTURER GALVANIZED VENTED CURB, WITH HINGED BASE, HIGH TEMP CURB SEAT RATED FOR CONTINUOUS DUTY AT 1500 DEG F. GREASE TRAP, AND CLEAN-OUT PORT

AIR DISTRIBUTION DEVICE SCHEDULE

MARK	MANUF. & MODEL	SERVICE	NECK SIZE	AIRFLOW (CFM)	FACE SIZE	CEILING TYPE	TYPE	FINISH	REMARKS
A –4	TITUS MCD	SUPPLY	MATCH DUCT INLET SIZE	AS NOTED ON PLANS	24X24	T-BAR	MODULAR CORE DIFFUSER	REFER TO ARCH.	4-WAY THROW UNLESS NOTED OTHERWISE.
B –4	TITUS 300RL	SUPPLY	MATCH DUCT INLET SIZE	AS NOTED ON PLANS	36X12	N/A	SURFACE OR DUCT MTD. SUPPLY REGISTER	REFER TO ARCH.	LOUVERED FACE, ADJUSTABLE DOUBLE DEFLECTION 3/4" SPACED BLADE SUPPLY REGISTER.
C –4	TITUS 350RL	RETURN/ EXHAUST	MATCH DUCT INLET SIZE	AS NOTED ON PLANS	30X12	N/A	SURFACE OR DUCT MTD. RETURN REGISTER	REFER TO ARCH.	LOUVERED FACE, FIXED 35 DEGREE DEFLECTION 3/4" SPACED BLADE RETURN REGISTER.

MAKE-UP AIR DUCT FURNACE (NATURAL GAS)

MARK	MANUFACTURER & MODEL NO.	AREA SERVED	OSA	HEATING CAP (BTU/HR) *ARI CONDITIONS		ELECTRICAL	OPERATION WEIGHT (LBS)	REMARKS
			AIRFLOW	INPUT	OUTPUT	V / PH / HZ		
DF 1	REZNOR X-300	KITCHEN VENTILATION	6,500	300,000	240,000	208 / 3 / 60	290	1 2 3 4 5
DF 2	REZNOR X-300	KITCHEN VENTILATION	6,500	300,000	240,000	208 / 3 / 60	290	1 2 3 4 5

1. EC MOTOR WITH MOTOR MOUNTED SPEED CONTROLLER.
2. IINTERLOCK V/A ELECTRICAL HARDWIRE RELAY. REFER TO MAKE UP AIR SUPPLY UNIT SCHEDULE FOR ASSOCIATED SYSTEM.
3. EQUIPMENT ELECTRICAL SUPPLY VOLTAGES COORDINATED WITH ELECTRICAL ENGINEER. REFER TO ELECTRICAL PLANS FOR DETAILS.
4. REFER TO ELECTRICAL PLANS FOR STARTER SPECIFICATIONS AND REQUIREMENTS. REFER TO CONTROLS PLANS FOR FAN OPERATION.

MAKE-UP AIR SUPPLY FANS

MARK	MANUFACTURER & MODEL NO.	AREA SERVED	OSA			ELECTRICAL			OPERATION WEIGHT (LBS)	REMARKS
			AIRFLOW	E.S.P.	HP	V / PH / HZ	MOCP	MCA		
SF 1	GREENHECK USF-20	KITCHEN VENTILATION	6,500	1.0	2.7	208 / 3 / 60	35	34.58	500	1 2 3 4 5 6
SF 2	GREENHECK USF-20	KITCHEN VENTILATION	6,500	1.0	2.7	208 / 3 / 60	35	34.58	500	1 2 3 4 5 6

1. EC MOTOR WITH MOTOR MOUNTED SPEED CONTROLLER.
2. IINTERLOCK V/A ELECTRICAL HARDWIRE RELAY. REFER TO EXHAUST FAN UNIT SCHEDULE FOR ASSOCIATED SYSTEM.
3. EQUIPMENT ELECTRICAL SUPPLY VOLTAGES COORDINATED WITH ELECTRICAL ENGINEER. REFER TO ELECTRICAL PLANS FOR DETAILS.
4. REFER TO ELECTRICAL PLANS FOR STARTER SPECIFICATIONS AND REQUIREMENTS. REFER TO CONTROLS PLANS FOR FAN OPERATION.
5. PROVIDE WITH MANUFACTURER PROVIDED ISOLATION BASE. SEE STRUCTURAL FOR ANCHORAGE.
6. PROVIDE NEW DUCT MOUNTED SMOKE DETECTOR FOR AUTOMATIC SHUTOFF OF MAU SYSTEM (SF-1 & SF-2) PER CMC 609.1. SEE NEW WORK ROOF PLAN FOR LOCATION.

GRAVITY INTAKE VENTILATOR SCHEDULE

MARK	MANUFACTURER & MODEL NO.	AREA SERVED	LOCATION	OSA		OPERATION WEIGHT (LBS)	REMARKS
				AIRFLOW	E.S.P.		
GI 1	GREENHECK GRSI-12	SSFC-1 (OSA)	ROOF	250	0.02	50	1 2

1. PROVIDE MANUFACTURE'S ROOF CURB, WITH GRAVITY BACKDRAFT DAMPER, DAMPER TRAY, AND INSECT SCREEN.
2. PROVIDE ALUMINUM BIRD SCREEN.

ALPHASTUDIO DESIGN GROUP
6152 INNOVATION WAY
CARLSBAD, 92009
760-431-2444
www.alphastudio-design.com

ARCHITECT OF RECORD

ENGINEER OF RECORD

DEC ENGINEERS
10150 MEANLEY DRIVE STE 250
SAN DIEGO, CA 92131
P: 858 578.3270 F: 858 578.3273

CENTRAL KITCHEN IMPROVEMENTS

LAKESIDE UNION SCHOOL DISTRICT

12335 WOODSIDE AVE
LAKESIDE, CA 92040

LAKESIDE UNION SCHOOL DISTRICT
12335 WOODSIDE AVE LAKESIDE CA 92040

REVISIONS

MARK	DATE	DESCRIPTION

PROJECT NO: #PIn

MODEL FILE:
23-002 LUSD Central Kitchen Improvements_Draft_23-03-17.pln

PLOT DATE:
4/26/2023

SHEET TITLE

MECHANICAL SCHEDULES

M601

© 2020 Architects Gallegos + Eckle inc. dba AlphaStudio Design Group

T:\ASDG Projects\Active Projects\23-002 LUSD Central Kitchen Improvements\23-002 LUSD Central Kitchen Improvements_Draft_23-03-17.pln

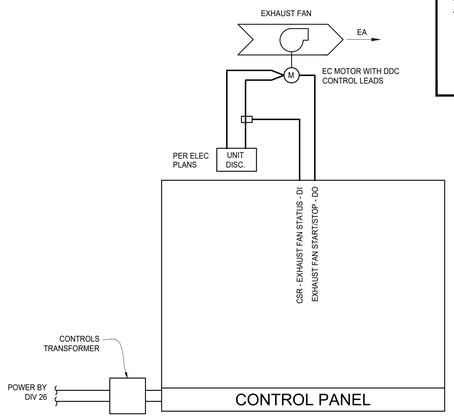

SEQUENCE OF OPERATION

RUN CONDITIONS
THE EXHAUST FAN SHALL BE CONTROLLED TO START/STOP BY THE ACCUREX CONTROL PANEL

MOTOR FAILURE
ALARMS SHALL BE PROVIDED AS FOLLOWS:

- AN ALARM SHALL BE GENERATED IF THE FAN IS COMMANDED "ON" AND THE FAN STATUS IS "OFF"

EXHAUST FAN CONTROL SCHEMATIC | SCALE NONE | 3

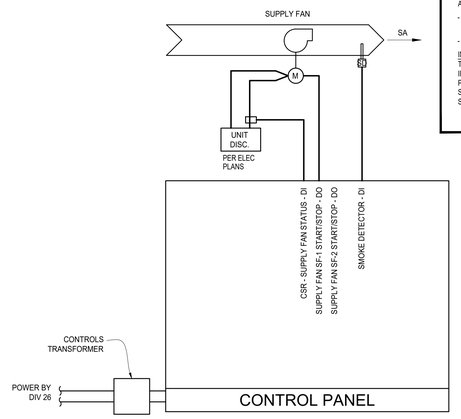

SEQUENCE OF OPERATION

RUN CONDITIONS
THE SUPPLY FANS SHALL BE ENABLED BY THE ACCUREX CONTROL PANEL.
ONCE ENABLED THE SUPPLY FAN SHALL START

ALARMS
ALARMS SHALL BE PROVIDED AS FOLLOWS:

- AN ALARM SHALL BE GENERATED IF THE FAN IS COMMANDED "ON" AND THE FAN STATUS IS "OFF"
- SMOKE DETECTOR

INTERLOCK
THE SF-1 SHALL BE LOGICALLY INTERLOCKED WITH SF-2.
IF EITHER SUPPLY FAN STATUS IS OFF, WHEN IT SHOULD OTHERWISE BE ON, OR EXHIBITS AN ALARM PREVENTING IT FROM OPERATING, THE OTHER UNIT SHALL BE DISABLED.
SF-1 SHALL BE ELECTRICALLY INTERLOCKED WITH DUCT FURNACE (DF-1).
SF-2 SHALL BE ELECTRICALLY INTERLOCKED WITH DUCT FURNACE (DF-2).

SUPPLY FAN CONTROL SCHEMATIC | SCALE NONE | 1

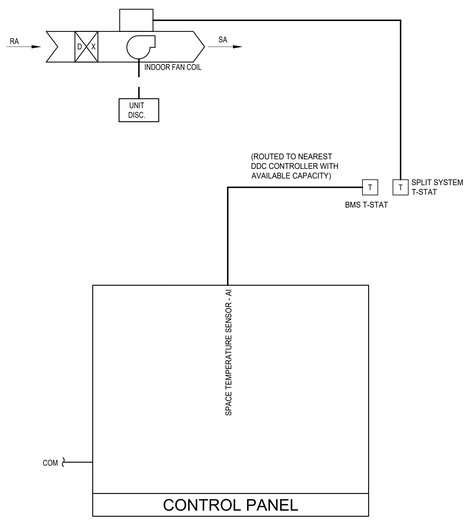

EQUIPMENT MANUFACTURER SUPPLIED CONTROLS COMPONENTS

1. DDC COMPONENTS, SENSORS, CONTROLLERS MAY BE SUPPLIED BY EQUIPMENT MANUFACTURERS BUT IT IS THE RESPONSIBILITY OF THE CONTROLS CONTRACTOR THAT ALL APPROVED EQUIPMENT AND COMPONENTS ARE COMPATIBLE AND FULLY INTEGRATED INTO THE BUILDING MANAGEMENT SYSTEM PER PLANS AND SPECIFICATIONS.

SEQUENCE OF OPERATION

SPILT SYSTEM DX UNITS

RUN CONDITIONS - SCHEDULED:
THE UNIT SHALL RUN ACCORDING USER INPUT SCHEDULE:

- OCCUPIED MODE: THE UNIT SHALL MAINTAIN
  A 72°F (ADJ.) COOLING SETPOINT
  A 68°F (ADJ.) HEATING SETPOINT
- UNOCCUPIED MODE (NIGHT SETBACK): NONE. DURING INITIAL SETUP THE SYSTEM SHALL BE SET TO RUN IN OCCUPIED MODE 24/7 FOR 365-DAYS.
-

SPLIT SYSTEM CONTROL SCHEMATIC | SCALE NONE | 4

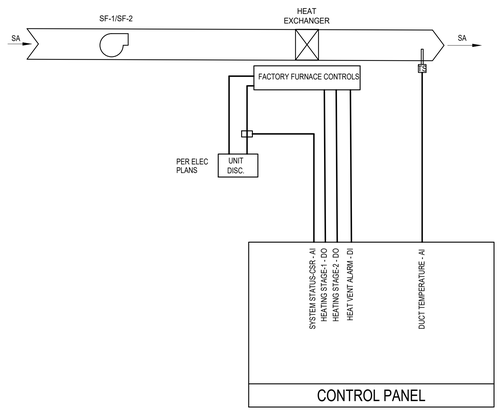

SEQUENCE OF OPERATION

RUN CONDITIONS - INTERMITTENT:
THE UNIT SHALL OPERATE BASED ON THE ELECTRICAL INTERLOCK OF THE ASSOCIATED SUPPLY FAN (SF-1/SF-2).

- THE UNIT SHALL MAINTAIN
  A 68°F (ADJ.) HEATING SETPOINT

ALARM - EQUIPMENT STATUS - (BMS MONITORING)
AN ALARM SHALL BE GENERATED AND SENT TO THE BUILDING BMS WHEN THE HEAT VENT UNIT IS COMMANDED "ON" AND THE FAN STATUS IS "OFF".

DEFERRED TO EQUIPMENT MANUFACTURER
EQUIPMENT SHALL BE PROVIDED WITH A FACTOR INSTALLED AND WIRED CONTROLLER FOR OPERATION AND SEQUENCING OF THE THE COMBUSTION AIR FAN, GAS VALVES, HEATER ELEMENT STAGES, AND GAS SAFETY VALVES.

DUCTED FURNACE CONTROL SCHEMATIC | SCALE NONE | 2

ALPHASTUDIO DESIGN GROUP
6152 INNOVATION WAY
CARLSBAD, 92009
760-431-2444
www.alphastudio-design.com

ARCHITECT OF RECORD

ENGINEER OF RECORD

DEC ENGINEERS
10150 MEANLEY DRIVE STE 250
SAN DIEGO, CA 92131
P: 858 578.3270 F: 858 578.3273

CENTRAL KITCHEN IMPROVEMENTS

LAKESIDE UNION SCHOOL DISTRICT

12335 WOODSIDE AVE
LAKESIDE, CA 92040

LAKESIDE UNION SCHOOL DISTRICT
12335 WOODSIDE AVE LAKESIDE CA 92040

REVISIONS

MARK	DATE	DESCRIPTION

PROJECT NO: #PIn
MODEL FILE:
23-002 LUSD Central Kitchen Improvements_Draft_23-03-17.pln

PLOT DATE:
4/26/2023

SHEET TITLE

MECHANICAL CONTROLS

M701

© 2020 Architects Gallegos + Eckle inc. dba AlphaStudio Design Group

T:\ASDG Projects\Active Projects\23-002 LUSD Central Kitchen Improvements\23-002 LUSD Central Kitchen Improvements_Draft_23-03-17.pln

ABBREVIATIONS

A	AMPERE (AMPS)
AC	ALTERNATING CURRENT
AF	AMPS-FRAME (RATING)
AIC	AMP INTERRUPTING CURRENT
AM	AMMETER
AS	AMP SWITCH (FUSED SWITCH RATING)
AT	AMPS-TRIP (RATING)
AWG	AMERICAN WIRE GAUGE
BC	BARE COPPER
BLDG	BUILDING
C	CONDUIT/COMMUNICATIONS
CB	CIRCUIT BREAKER
CO	CONDUIT ONLY
CT	CURRENT TRANSFORMER
CU	COPPER
CFOI	CONTRACTOR FURNISHED OWNER INSTALLED
CFCI	CONTRACTOR FURNISHED CONTRACTOR INSTALLED
DPDT	DOUBLE POLE DOUBLE THROW
DPST	DOUBLE POLE SINGLE THROW
DWG	DRAWING
EX	EXISTING
FLA	FULL LOAD AMPS
FVR	FULL VOLTAGE REVERSING
FVNR	FULL VOLTAGE NON-REVERSING
GFI	GROUND FAULT INTERRUPTER
GRD/GND	GROUND
HID	HIGH INTENSITY DISCHARGE
HOA	HAND-OFF-AUTOMATIC
HP	HORSEPOWER
HPS	HIGH PRESSURE SODIUM
HZ	HERTZ
KW	KILOWATT
LCL	LONG CONTINUOUS LOAD
LRA	LOCKED ROTOR AMPS
LTG	LIGHTING
MCC	MOTOR CONTROL CENTER
MCM (KCM)	THOUSAND CIRCULAR MILS
MECH	MECHANICAL
NC	NORMALLY CLOSED
NF	NON-FUSED
NO	NORMALLY OPEN/NUMBER
OFCI	OWNER FURNISHED CONTRACTOR INSTALLED
OFOI	OWNER FURNISHED OWNER INSTALLED
P	POLE/POWER
PH	PHASE
POC	POINT OF CONNECTION
PRS	PVC COATED RIGID STEEL (CONDUIT)
PDLZ	PRIMARY DAYLIT ZONE
PT	POTENTIAL TRANSFORMER
PVC	POLYVINYL CHLORIDE DUCT
SDLZ	SECONDARY DAYLIT ZONE
SWBD	SWITCHBOARD
TYP	TYPICAL
UG	UNDERGROUND
UON	UNLESS OTHERWISE NOTED
V	VOLT
VA	VOLTAMPERES
VM	VOLTMETER
VL	VERIFY LOCATION
W	WIRE/WATTS
WP	WEATHERPROOF (NEMA TYPE 3R)
WT	WATERTIGHT
XP	EXPLOSION PROOF (RATED FOR AREA HAZARD)

ELECTRICAL SYMBOL LEGEND

POWER

- DUPLEX RECEPTACLE, WALL MOUNTED, +18" A.F.F. (U.O.N.)
- WP — DUPLEX RECEPTACLE IN WEATHERPROOF ENCLOSURE +18" A.F.F. (U.O.N.)
- J H — CODE SIZED JUNCTION BOX, CEILING OR WALL MOUNTED
- FUSED DISCONNECT SWITCH, WHERE SHOWN NF = NON-FUSED.
- CONDUIT AND WIRE, CONCEALED IN CEILING OR WALL
- CONDUIT AND WIRE, CONCEALED IN OR UNDER FLOOR
- FLEXIBLE CONDUIT CONNECTION
- BRANCH CIRCUIT HOMERUN TO PANEL. SLASHES INDICATE NUMBER OF CONDUCTORS. EQUIPMENT GROUND WIRE NOT INDICATED U.O.N. #12 CONDUCTORS ARE MINIMUM, NO HASH MARKS = MIN (2) #12
- CONDUIT DROP OR TRANSITION.
- PANELBOARD SURFACE MOUNTED
- PANELBOARD RECESSED
- DISTRIBUTION SWITCHBOARD
- T — STEPDOWN TRANSFORMER

DISTRIBUTION EQUIPMENT

CIRCUIT BREAKER

200AF	200AMP FRAME
200AT	200AMP TRIP
3P	3 POLE
10,000AIC	10,000 AMPS INTERRUPTING CURRENT

FUSED SWITCH

200AS	200AMP SWITCH
200AF	200AMP FUSE
3P	3 POLE

GENERAL PROJECT NOTES:

1. UNLESS WHERE OTHERWISE NOTED, ALL WORK INDICATED ON THESE DRAWINGS SHALL BE CONSIDERED NEW WORK.
2. UNLESS WHERE OTHERWISE NOTED, ALL DIMENSIONS ARE TO BE CENTERLINE OF THE DEVICE.
3. "GENERAL NOTES" SHOWN ON AN INDIVIDUAL DRAWING APPLY TO ALL WORK SHOWN ON THAT SHEET. "KEY NOTES" ONLY APPLY TO SPECIFIC ITEMS WHERE ANNOTATED AT SPECIFIC LOCATIONS. SOME KEY NOTES MAY NOT APPLY TO ANY SPECIFIC ITEMS.
4. REFERENCE FOOD SERVICE PLANS FOR ADDITIONAL ELECTRICAL REQUIREMENTS.

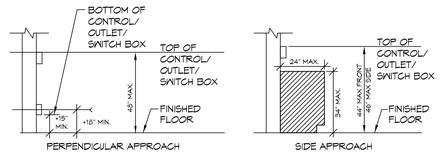

NOTE: MAINTAIN MINIMUM 30"X48" CLEAR FLOOR SPACE AT EACH APPROACH.

MOUNTING HEIGHT OVER OBSTRUCTION

NO SCALE

1 / E1.0

ALPHASTUDIO DESIGN GROUP
6152 INNOVATION WAY
CARLSBAD, 92009
760-431-2444
www.alphastudio-design.com

ARCHITECT OF RECORD

LICENSED ARCHITECT — PAUL R. GALLEGOS — No. C24063 — EXP. 01/25 — STATE OF CALIFORNIA

ENGINEER OF RECORD

CENTRAL KITCHEN IMPROVEMENTS

LAKESIDE UNION SCHOOL DISTRICT

12335 WOODSIDE AVE
LAKESIDE, CA 92040

LAKESIDE UNION SCHOOL DISTRICT
12335 WOODSIDE AVE LAKESIDE CA 92040

REVISIONS

MARK	DATE	DESCRIPTION

PROJECT NO: #PIn

MODEL FILE:
23-002 LUSD Central Kitchen Improvements_Draft_23-03-17.pln

PLOT DATE:
4/26/2023

SHEET TITLE

ELECTRICAL LEGEND AND NOTES

E1.0

REGISTERED PROFESSIONAL ENGINEER — No. E 14781 — Exp. 6-30-2025 — ELECTRICAL — STATE OF CALIFORNIA

JOHNSON CONSULTING ENGINEERS, INC.
Power | Lighting | Multimedia
Communications | Data Networking
12875 Brookprinter Place, Suite 300
Poway, CA 92064
P 858.679.4030 | F 858.513.0559
www.jce-inc.com

#22121 5/15/2023

STATE OF CALIFORNIA
Indoor Lighting
CALIFORNIA ENERGY COMMISSION

CERTIFICATE OF COMPLIANCE		NRCC-LTI-E
This document is used to demonstrate compliance with requirements in 110.9, 110.12(c), 130.0, 130.1, 140.6 and 141.0(b)2 for indoor lighting scopes using the prescriptive path for nonresidential and hotel/motel occupancies. It is also used to document compliance with requirements in 160.5, 170.2(e) and 180.2(b)4 for indoor lighting scopes using the prescriptive path for multifamily occupancies. Multifamily includes dormitory and senior living facilities.		
Project Name: LAKESIDE USD CENTRAL KITCHEN IMPROVEMENTS	**Report Page:**	**(Page 1 of 7)**
Project Address:	**Date Prepared:**	2023-05-11T11:58:41-04:00

A. GENERAL INFORMATION

01	Project Location (city)	LAKESIDE	04 Total Conditioned Floor Area (ft^2)	2,868
02	Climate Zone	10	05 Total Unconditioned Floor Area (ft^2)	0
03	Occupancy Types Within Project (select all that apply):		06 # of Stories (Habitable Above Grade)	1

• School or Classroom

B. PROJECT SCOPE

This table includes any lighting systems that are within the scope of the permit application and are demonstrating compliance using the prescriptive path outlined in 140.6 / 170.2(e) or 141.0(b)2 / 180.2(b)4 for alterations.

Scope of Work	Conditioned Spaces		Unconditioned Spaces	
01	02	03	04	05
My Project Consists of (check all that apply):	Calculation Method	Area (ft^2)	Calculation Method	Area (ft^2)
☒ New Lighting System	Area Category Method	2868	N/A	0
☐ New Lighting System - Parking Garage	N/A	0	N/A	0
Total Area of Work (ft^2)	2868			

STATE OF CALIFORNIA
Indoor Lighting
CALIFORNIA ENERGY COMMISSION

CERTIFICATE OF COMPLIANCE		NRCC-LTI-E
Project Name: LAKESIDE USD CENTRAL KITCHEN IMPROVEMENTS	**Report Page:**	**(Page 2 of 7)**
	Date Prepared:	2023-05-11T11:58:41-04:00

C. COMPLIANCE RESULTS

If any cell on this table says "DOES NOT COMPLY" or "COMPLIES with Exceptional Conditions" refer to Table D. for guidance.

Lighting in conditioned and unconditioned spaces must not be combined for compliance per 140.6(b)1 / 170.2(e)	Allowed Lighting Power per 140.6(b) / 170.2(e) (Watts)						Adjusted Lighting Power per 140.6(a) / 170.2(e) (Watts)				Compliance Results
	01	02	03	04		05		06	07	08	09
	Complete Building 140.6(c)1	Area Category 140.6(c)2 / 170.2(e)4	Area Category Additional 140.6(c)2G / 170.2(e)4Av (+)	Tailored 140.6(c)3 / 170.2(e)4B (+)	=	**Total Allowed** (Watts)	≥	Total Designed (Watts)	Adjustments PLF Lighting Control Credits 140.6(a)2 / 170.2(e)1B (-)	= **Total Adjusted** (Watts) *Includes Adjustments	**05 must be >= 08 140.6 / 170.2(e)**
	(See Table I)	(See Table I)	(See Table J)	(See Table K)				(See Table F)	(See Table P)		
Conditioned		2,724.6			=	2,724.6	≥	907		= 907	COMPLIES
Unconditioned					=		≥			=	
Controls Compliance (See Table H for Details)											COMPLIES
Rated Power Reduction Compliance (See Table Q for Details)											

D. EXCEPTIONAL CONDITIONS

This table is auto-filled with uneditable comments because of selections made or data entered in tables throughout the form.

Selections made in Certificates of Acceptance Table have been changed by the permit applicant. See Table E. Additional Remarks for permit applicant's explanation.

E. ADDITIONAL REMARKS

This table includes remarks made by the permit applicant to the Authority Having Jurisdiction.

{NRCA-LTI-02-A Explanation} NA ---- {NRCA-LTI-03-A Explanation} NA

STATE OF CALIFORNIA
Indoor Lighting
CALIFORNIA ENERGY COMMISSION

CERTIFICATE OF COMPLIANCE		NRCC-LTI-E
Project Name: LAKESIDE USD CENTRAL KITCHEN IMPROVEMENTS	**Report Page:**	**(Page 3 of 7)**
	Date Prepared:	2023-05-11T11:58:41-04:00

F. INDOOR LIGHTING FIXTURE SCHEDULE

This table includes all planned permanent and portable lighting other than dwelling unit/ hotel/ motel room lighting. Multifamily dwelling unit and hotel/motel room lighting is documented in Table T. If using Table T to document lighting in multifamily common use areas providing shared provisions for living, eating, cooking or sanitation, those luminaires are not included here.

Designed Wattage: Conditioned Spaces

01	02	03	04	05	06	07	08	09	10	
Name or Item Tag	Complete Luminaire Description	Modular (Track) Fixture	Small Aperture & Color Change[1]	Watts per luminaire[2]	How is Wattage determined	Total Number of Luminaires	Excluded per 140.6(a)3 / 170.2(e)2C	Design Watts	Field Inspector Pass	Fail
A/A1	2X4 LED RECESSED	No	NA	39	Mfr. Spec	21	No	819	☐	☐
B	2X4 LED RECESSED	No	NA	22	Mfr. Spec	4	No	88	☐	☐
Total Designed Watts: CONDITIONED SPACES								907		

[1]FOOTNOTE: Design Watts for small aperture and color changing luminaires which qualify per 140.6(a)4B / 170.2(e)2D is adjusted to be 75% /80% of their rated wattage. Table F automatically makes this adjustment, the permit applicant should enter full rated wattage in column 05.

[2]Authority Having Jurisdiction may ask for luminaire cut sheets to confirm wattage used for compliance per 130.0(c) / 160.5(b). Wattage used must be the maximum rated for the luminaire, not the lamp.

G. MODULAR LIGHTING SYSTEMS

This section does not apply to this project.

H. INDOOR LIGHTING CONTROLS (Not including PAFs)

This table includes lighting controls for conditioned and unconditioned spaces.

Building Level Controls

01	02	03	
		Field Inspector	
Mandatory Demand Response 110.12(c)	Shut-off controls 130.1(c) / 160.5(b)4C	Pass	Fail
NA < 4,000W subject to multilevel	See Area/Space Level Controls	☐	☐

STATE OF CALIFORNIA
Indoor Lighting
CALIFORNIA ENERGY COMMISSION

CERTIFICATE OF COMPLIANCE		NRCC-LTI-E
Project Name: LAKESIDE USD CENTRAL KITCHEN IMPROVEMENTS	**Report Page:**	**(Page 4 of 7)**
	Date Prepared:	2023-05-11T11:58:41-04:00

H. INDOOR LIGHTING CONTROLS (Not including PAFs)

Area Level Controls

04	05	06	07	08	09	10	11	12	
Area Description	Complete Building or Area Category Primary Function Area	Manual Area Controls 130.1(a) / 160.5(b)4A	Multi-Level Controls 130.1(b) / 160.5(b)4B	Shut-Off Controls 130.1(c) // 160.5(b)4C	Primary/Sky lit Daylighting 130.1(d) / 160.5(b)4D	Secondary Daylighting 130.1(d) / 160.5(b)4D	Interlocked Systems 140.6(a)1/ 170.2(e)7A	Field Inspector Pass	Fail
KITCHEN	Kitchen/ Food Preparation	Readily Accessible	Dimmer	Occupancy Sensor	Included	Included	No	☐	☐
					13				
					Plan Sheet Showing Daylit Zones:				
					E2.1				

I. LIGHTING POWER ALLOWANCE: COMPLETE BUILDING OR AREA CATEGORY METHODS

Each area complying using the Complete Building or Area Category Methods per 140.6(b) are included in this table. Column 06 indicates if additional lighting power allowances per 140.6(c) or adjustments per 140.6(a) are being used .

Conditioned Spaces

01	02	03	04	05	06	
Area Description	Complete Building or Area Category Primary Function Area	Allowed Density (W/ft^2)	Area (ft^2)	Allowed Wattage (Watts)	Additional Allowance / Adjustment Area Category	PAF
KITCHEN	Kitchen/ Food Preparation	0.95	2,868	2,724.6	No	No
		TOTALS:	2,868	2,724.6	See Tables J, or P for detail	

J. ADDITIONAL ALLOWANCE: AREA CATEGORY METHOD QUALIFYING LIGHTING SYSTEM

This section does not apply to this project.

STATE OF CALIFORNIA
Indoor Lighting
CALIFORNIA ENERGY COMMISSION

CERTIFICATE OF COMPLIANCE		NRCC-LTI-E
Project Name: LAKESIDE USD CENTRAL KITCHEN IMPROVEMENTS	**Report Page:**	**(Page 5 of 7)**
	Date Prepared:	2023-05-11T11:58:41-04:00

K. TAILORED METHOD GENERAL LIGHTING POWER ALLOWANCE

This section does not apply to this project.

L. ADDITIONAL LIGHTING ALLOWANCE: TAILORED WALL DISPLAY

This section does not apply to this project.

M. ADDITIONAL LIGHTING ALLOWANCE: TAILORED FLOOR AND TASK LIGHTING

This section does not apply to this project.

N. ADDITIONAL LIGHTING ALLOWANCE: TAILORED DECORATIVE /SPECIAL EFFECTS

This section does not apply to this project.

O. ADDITIONAL LIGHTING ALLOWANCE: TAILORED VERY VALUABLE MERCHANDISE

This section does not apply to this project.

P. POWER ADJUSTMENT: LIGHTING CONTROL CREDIT (POWER ADJUSTMENT FACTOR (PAF))

This section does not apply to this project.

Q. RATED POWER REDUCTION COMPLIANCE FOR ONE-FOR-ONE ALTERATIONS

This section does not apply to this project.

R. 80% LIGHTING POWER FOR ALL ALTERATIONS - CONTROLS EXCEPTIONS

This section does not apply to this project.

STATE OF CALIFORNIA
Indoor Lighting
CALIFORNIA ENERGY COMMISSION

CERTIFICATE OF COMPLIANCE		NRCC-LTI-E
Project Name: LAKESIDE USD CENTRAL KITCHEN IMPROVEMENTS	**Report Page:**	**(Page 6 of 7)**
	Date Prepared:	2023-05-11T11:58:41-04:00

S. DAYLIGHT DESIGN POWER ADJUSTMENT FACTOR (PAF)

This section does not apply to this project.

T. DWELLING UNIT LIGHTING

This section does not apply to this project.

U. DECLARATION OF REQUIRED CERTIFICATES OF INSTALLATION

Selections have been made based on information provided in this document. If any selections have been changed by permit applicant, an explanation should be included in Table E. Additional Remarks. These documents must be provided to the building inspector during construction and can be found online

Form/Title
NRCI-LTI-E - Must be submitted for all buildings

V. DECLARATION OF REQUIRED CERTIFICATES OF ACCEPTANCE

There are no NRCA forms required for this project.

STATE OF CALIFORNIA
Indoor Lighting
CALIFORNIA ENERGY COMMISSION

CERTIFICATE OF COMPLIANCE		NRCC-LTI-E
Project Name: LAKESIDE USD CENTRAL KITCHEN IMPROVEMENTS	**Report Page:**	**(Page 7 of 7)**
Project Address:	**Date Prepared:**	2023-05-11T11:58:41-04:00

DOCUMENTATION AUTHOR'S DECLARATION STATEMENT

I certify that this Certificate of Compliance documentation is accurate and complete.

Documentation Author Name: Monica Hansen	Documentation Author Signature: Monica Hansen
Company: Johnson Consulting Engineers	Signature Date: 5/11/23
Address: 12875 Brookprinter Pl, Suite 300	CEA/ HERS Certification Identification (if applicable):
City/State/Zip: Poway, CA 92064	Phone: 858-679-4030

RESPONSIBLE PERSON'S DECLARATION STATEMENT

I certify the following under penalty of perjury, under the laws of the State of California:

1. The information provided on this Certificate of Compliance is true and correct.
2. I am eligible under Division 3 of the Business and Professions Code to accept responsibility for the building design or system design identified on this Certificate of Compliance (responsible designer)
3. The energy features and performance specifications, materials, components, and manufactured devices for the building design or system design identified on this Certificate of Compliance conform to the requirements of Title 24, Part 1 and Part 6 of the California Code of Regulations.
4. The building design features or system design features identified on this Certificate of Compliance are consistent with the information provided on other applicable compliance documents, worksheets, calculations, plans and specifications submitted to the enforcement agency for approval with this building permit application.
5. I will ensure that a completed signed copy of this Certificate of Compliance shall be made available with the building permit(s) issued for the building, and made available to the enforcement agency for all applicable inspections. I understand that a completed signed copy of this Certificate of Compliance is required to be included with the documentation the builder provides to the building owner at occupancy.

Responsible Designer Name: Monica Hansen	Responsible Designer Signature: Monica Hansen
Company: Johnson Consulting Engineers	Date Signed: 5/11/23
Address: 12875 Brookprinter Pl, Suite 300	License: E 14781
City/State/Zip: Poway, CA 92064	Phone: 858-679-4030

© 2020 Architects Gallegos + Eckle Inc. dba AlphaStudio Design Group
T:\ASDG Projects\Active Projects\23-002 LUSD Central Kitchen Improvements\23-002 LUSD Central Kitchen Improvements_Draft_23-03-17.pln

ALPHASTUDIO DESIGN GROUP
6152 INNOVATION WAY
CARLSBAD, 92009
760-431-2444
www.alphastudio-design.com

ARCHITECT OF RECORD

LICENSED ARCHITECT PAUL R. GALLEGOS No. C24063 EXP. 01/25 STATE OF CALIFORNIA

ENGINEER OF RECORD

CENTRAL KITCHEN IMPROVEMENTS
LAKESIDE UNION SCHOOL DISTRICT

12335 WOODSIDE AVE
LAKESIDE, CA 92040

LAKESIDE UNION SCHOOL DISTRICT
12335 WOODSIDE AVE LAKESIDE CA 92040

REVISIONS

MARK	DATE	DESCRIPTION

PROJECT NO: #PIn

MODEL FILE:
23-002 LUSD Central Kitchen Improvements_Draft_23-03-17.pln

PLOT DATE:
4/26/2023

SHEET TITLE

TITLE 24

REGISTERED PROFESSIONAL ENGINEER Monica Hansen No. E 14781 Exp. 6-30-2025 ELECTRICAL STATE OF CALIFORNIA

JOHNSON CONSULTING ENGINEERS, INC.
Power | Lighting | Multimedia
Communications | Data Networking
12875 Brookprinter Place, Suite 300
Poway, CA 92064
P 858.679.4030 | F 858.513.0559
www.jce-inc.com

#22121 5/15/2023

E2.0

© 2020 Architects Gallegos + Eckle inc. dba AlphaStudio Design Group

T:\ASDG Projects\Active Projects\23-002 LUSD Central Kitchen Improvements\23-002 LUSD Central Kitchen Improvements_Draft_23-03-17.pln

1 KITCHEN FLOOR PLAN - LIGHTING

SCALE: 1/4" = 1'-0"

GENERAL NOTES:

1. REFERENCE ARCHITECTURAL REFLECTED CEILING PLANS FOR EXACT LOCATION OF ALL LIGHTING FIXTURES.
2. REFERENCE E2 SERIES SHEETS FOR ALL FIXTURE TYPES AND FOR TYPICAL DETAILS.
3. REFERENCE E6 SERIES SHEETS FOR TYPICAL CONDUIT AND BACKBOX INSTALLATION DETAILS.
4. LETTERS IN OR ADJACENT TO EACH FIXTURE OR FIXTURE ROW INDICATES SWITCH AND OR OCCUPANCY SENSOR WHICH CONTROLS THE LIGHTING FIXTURE.
5. CIRCUIT HOMERUNS ARE INDICATED TO SHOW THE LOCATION AND NUMBER OF CIRCUITS TO BE GROUPED TOGETHER.
6. PROVIDE MINIMUM 3/4" CONDUIT AND #12 CIRCUIT CONDUCTORS AS REQUIRED TO CONNECT EACH LIGHTING FIXTURES TO THEIR INDICATED CONTROL DEVICES. (U.O.N.)

KEY NOTES:

1. SEE ARCHITECTURAL PLANS FOR MOUNTING HEIGHT.
2. 2 #12 (HOT), 1 #10 (NEUTRAL), 1 #12 (GND), 3/4"C.
3. 3 #12 (HOT), 1 #10 (NEUTRAL), 1 #12 (GND), 3/4"C.
4. 4 #12 (HOT), 2 #10 (NEUTRAL), 1 #12 (GND), 3/4"C.
5. PROVIDE CONSTANT HOT FOR BATTERY CHARGING.

ALPHASTUDIO DESIGN GROUP

6152 INNOVATION WAY
CARLSBAD, 92009
760-431-2444
www.alphastudio-design.com

ARCHITECT OF RECORD

LICENSED ARCHITECT
PAUL R. GALLEGOS
No. C24063
EXP. 01/25
STATE OF CALIFORNIA

ENGINEER OF RECORD

CENTRAL KITCHEN IMPROVEMENTS

LAKESIDE UNION SCHOOL DISTRICT

12335 WOODSIDE AVE
LAKESIDE, CA 92040

LAKESIDE UNION SCHOOL DISTRICT
12335 WOODSIDE AVE LAKESIDE CA 92040

REVISIONS

MARK	DATE	DESCRIPTION

PROJECT NO: #PIn

MODEL FILE:
23-002 LUSD Central Kitchen Improvements_Draft_23-03-17.pln

PLOT DATE:
4/26/2023

SHEET TITLE

KITCHEN FLOOR PLAN - LIGHTION

E2.1

REGISTERED PROFESSIONAL ENGINEER
No. E 14781
Exp. 6-30-2025
ELECTRICAL
STATE OF CALIFORNIA

JOHNSON CONSULTING ENGINEERS, INC.
Power | Lighting | Multimedia
Communications | Data Networking
12875 Brookprinter Place, Suite 300
Poway, CA 92064
P 858.679.4030 | F 858.513.0559
www.jce-inc.com

#22121 5/17/2023

© 2020 Architects Gallegos + Eckle inc. dba AlphaStudio Design Group

T:\ASDG Projects\Active Projects\23-002 LUSD Central Kitchen Improvements\23-002 LUSD Central Kitchen Improvements_Draft_23-03-17.pln

S abc — MAIN ENTRY MANUAL ON AND OFF WITH DIMMER FOR ZONE 'a'&'b'&'c'

GENERAL NOTES

1. REFERENCE SPECIFICATION SECTION 260923 DIGITAL LIGHTING CONTROL SYSTEM FOR ADDITIONAL SCOPE OF WORK.
2. ITEMS RC1 RC2 RC3 PL1 TO BE WALL MOUNTED ABOVE THE ROOM ENTRY DOOR, ABOVE THE CEILING IN ALL ROOMS WITH T-BAR CEILINGS.
3. ITEMS RC1 RC2 RC3 PL1 TO BE LOCATED WITHIN A 24" x 24" RECESSED ENCLOSURE WITH HINGED LOCKING COVER LOCATED ABOVE THE ROOM ENTRY DOOR IN ALL ROOMS WITH INACCESSIBLE CEILINGS.
4. ALL 0-10V WIRING AND CAT 5E WIRING MAY BE INSTALLED AS OPEN WIRE WHERE ABOVE ACCESSIBLE CEILINGS. WHERE ABOVE INACCESSIBLE OR EXPOSED CEILINGS IT SHALL BE INSTALLED IN CONDUIT.
5. QUANTITY OF SENSORS SHOWN ON EACH DIAGRAM AND FLOOR PLAN IS FOR REFERENCE ONLY. PROVIDE FULL COVERAGE AND ADDITIONAL SENSORS AS REQUIRED.

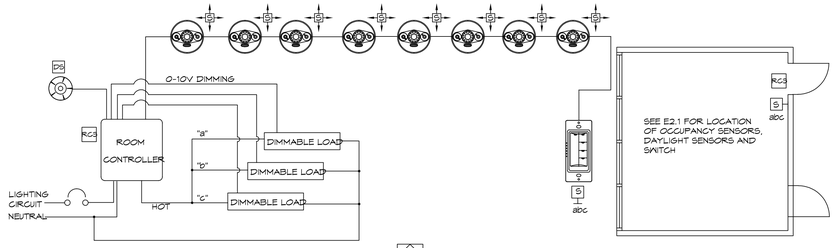

KITCHEN LIGHTING CONTROL DIAGRAM

G

NO SCALE

LIGHTING FIXTURE SCHEDULE

Mark	Approved Manufacturer's (See Key Note No. 1)	Catalog Series Type (See Key Note No. 2)	FIXTURE: OTHER	FIXTURE: LED	Fixture Watts	MOUNTING: Recessed / Ceiling	Surface / Ceiling	Wall	Recessed / Wall	Pendant	Surface / Wall	Pole	Description		
A	LITHONIA	WRTL SERIES	☐	☐	39w	■	☐	☐	☐	☐	☐	☐	2 X 4 FT RECESSED FLUSH LENS, MINIMUM 5000 LUMENS AT 4000K, MIN. 80 CRI, WET LOCATION RATED.		
			Driver: ■ 120/277v; ■ 0-10v Dim; ☐; ☐										☐ Provide Emergency Ballast Type 'EM'	☐ Provide Custom Color Finish, to be selected at time submittal	☐ See Detail
A1	LITHONIA	WRTL SERIES	☐	☐	39w	■	☐	☐	☐	☐	☐	☐	2 X 4 FT RECESSED FLUSH LENS, MINIMUM 5000 LUMENS AT 4000K, MIN. 80 CRI, WET LOCATION RATED.		
			Driver: ■ 120/277v; ■ 0-10v Dim; ☐; ☐										☐ Provide Emergency Ballast Type 'EM'	☐ Provide Custom Color Finish, to be selected at time submittal	☐ See Detail
B	LITHONIA	WRTL SERIES	☐	☐	22w	■	☐	☐	☐	☐	☐	☐	2 X 4 FT RECESSED FLUSH LENS, MINIMUM 3000 LUMENS AT 4000K, MIN. 80 CRI, WET LOCATION RATED.		
			Driver: ■ 120/277v; ■ 0-10v Dim; ☐; ☐										☐ Provide Emergency Ballast Type 'EM'	☐ Provide Custom Color Finish, to be selected at time submittal	☐ See Detail
X	LIFELINE	LEX SERIES	☐	☐	N/A	☐	■	☐	☐	☐	☐	☐	SELF LUMINOUS EXIT SIGN WITH GREEN LETTERING. NUMBER OF FACES AS REQUIRED. CEILING MOUNT. 20 YR LIFE AND PLASTIC WHITE FRAME		
	MERIT	P180 SERIES	Driver: ☐ 120/277v; ☐ 0-10v Dim; ☐; ☐												
	LIGHTOLIER	TE SERIES													
	OR EQUAL												☐ Provide Emergency Ballast Type 'EM'	☐ Provide Custom Color Finish, to be selected at time submittal	☐ See Detail

LIGHTING CONTROL DIAGRAMS

NO SCALE

1
E2.2

ALPHASTUDIO DESIGN GROUP
6152 INNOVATION WAY
CARLSBAD, 92009
760-431-2444
www.alphastudio-design.com

ARCHITECT OF RECORD

LICENSED ARCHITECT
PAUL R. GALLEGOS
No. C24063
EXP. 01/25
STATE OF CALIFORNIA

ENGINEER OF RECORD

CENTRAL KITCHEN IMPROVEMENTS

LAKESIDE UNION SCHOOL DISTRICT

12335 WOODSIDE AVE
LAKESIDE, CA 92040

LAKESIDE UNION SCHOOL DISTRICT
12335 WOODSIDE AVE LAKESIDE CA 92040

REVISIONS

MARK	DATE	DESCRIPTION

PROJECT NO: #Pln

MODEL FILE:
23-002 LUSD Central Kitchen Improvements_Draft_23-03-17.pln

PLOT DATE:
4/26/2023

SHEET TITLE

LIGHTING DETAILS

REGISTERED PROFESSIONAL ENGINEER
Michael Johnson
No. E 14781
Exp. 6-30-2025
ELECTRICAL
STATE OF CALIFORNIA

JOHNSON CONSULTING ENGINEERS, INC.
Power | Lighting | Multimedia
Communications | Data Networking
12875 Brookprinter Place, Suite 300
Poway, CA 92064
P 858.679.4030 | F 858.513.0559
www.jce-inc.com

#22121 5/15/2023

E2.2

© 2020 Architects Gallegos + Eckle inc. dba AlphaStudio Design Group

T:\ASDG Projects\Active Projects\23-002 LUSD Central Kitchen Improvements\23-002 LUSD Central Kitchen Improvements_Draft_23-03-17.pln

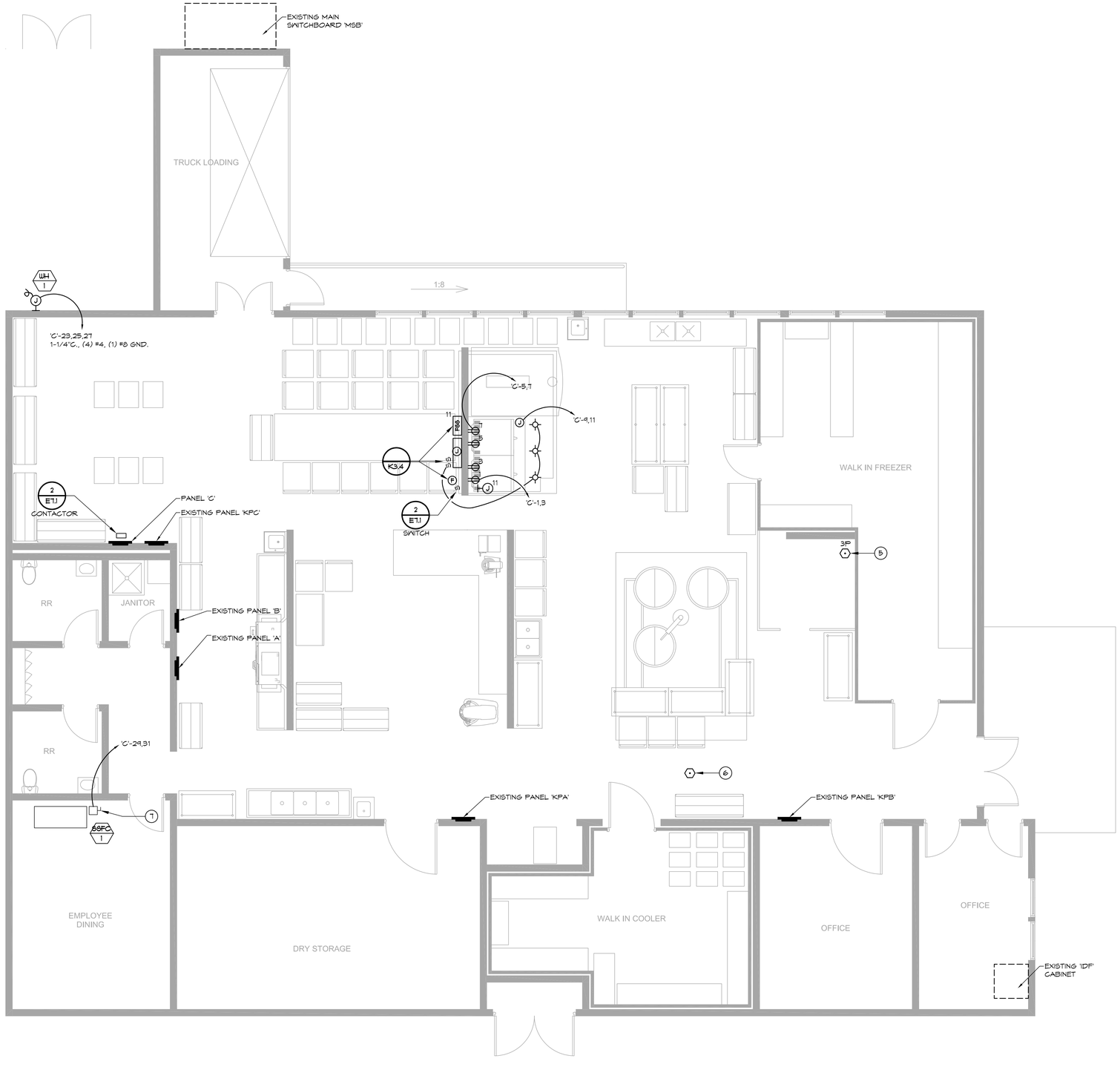

1 KITCHEN FLOOR PLAN - POWER

SCALE: 1/4" = 1'-0"

0 2 4 8

GENERAL NOTES:

1. REFERENCE ARCHITECTURAL INTERIOR ELEVATIONS FOR EXACT LOCATION OF ALL WALL MOUNTED POWER DEVICES WHERE INDICATED AT MOUNTING HEIGHTS OTHER THAN 18".
2. REFERENCE SHEET E6 SERIES SHEETS FOR MECHANICAL EQUIPMENT SCHEDULE.
3. REFERENCE E3 AND E8 SERIES SHEETS FOR TYPICAL CONDUIT AND BACKBOX INSTALLATION DETAILS.
4. NUMBERS ADJACENT TO EACH POWER DEVICE INDICATES THE CIRCUIT NUMBER TO WHICH THE DEVICE IS TO BE CONNECTED.
5. CIRCUIT HOMERUNS ARE INDICATED TO SHOW THE LOCATION AND NUMBER OF CIRCUITS TO BE GROUPED TOGETHER.
6. PROVIDE MINIMUM 3/4" CONDUIT AND #12 CIRCUIT CONDUCTORS AS REQUIRED TO CONNECT EACH POWER DEVICE TO THEIR INDICATED CIRCUIT (U.O.N.).
7. FIELD VERIFY EXACT ROUTING LOCATION FOR CONCEALED CONDUITS AND RECEPTACLES PRIOR TO ROUGH-IN.
8. REFERENCE KITCHEN PLANS FOR ADDITIONAL SCOPE OF WORK.

KEY NOTES:

1. FIELD VERIFY EXACT LOCATION PRIOR TO ROUGH-IN.
2. 2 #12 (HOT), 1 #10 (NEUTRAL), 1 #12 (GND), 3/4"C.
3. 3 #12 (HOT), 1 #10 (NEUTRAL), 1 #12 (GND), 3/4"C.
4. 4 #12 (HOT), 2 #10 (NEUTRAL), 1 #12 (GND), 3/4"C.
5. PROVIDE NEW 3 PORT DATA OUTLET W/ (3) CAT6 DATA CABLES TO EXISTING IDF LOCATION.
6. PROVIDE NEW CAT6 DATA CABLE TO EXISTING IDF LOCATION.
7. 30A/2P DISC. SWI WITH 15 AMP FUSES

ALPHASTUDIO DESIGN GROUP

6152 INNOVATION WAY
CARLSBAD, 92009
760-431-2444
www.alphastudio-design.com

ARCHITECT OF RECORD

LICENSED ARCHITECT
PAUL R. GALLEGOS
No. C24063
EXP. 01/25
STATE OF CALIFORNIA

ENGINEER OF RECORD

CENTRAL KITCHEN IMPROVEMENTS

LAKESIDE UNION SCHOOL DISTRICT

12335 WOODSIDE AVE
LAKESIDE, CA 92040

LAKESIDE UNION SCHOOL DISTRICT
12335 WOODSIDE AVE LAKESIDE CA 92040

REVISIONS

MARK	DATE	DESCRIPTION

PROJECT NO: #PIn

MODEL FILE:
23-002 LUSD Central Kitchen Improvements_Draft_23-03-17.pln

PLOT DATE:
4/26/2023

SHEET TITLE

KITCHEN FLOOR PLAN - POWER

REGISTERED PROFESSIONAL ENGINEER
No. E 14781
Exp. 6-30-2025
ELECTRICAL
STATE OF CALIFORNIA

JOHNSON CONSULTING ENGINEERS, INC.
Power | Lighting | Multimedia
Communications | Data Networking
12875 Brookprinter Place, Suite 300
Poway, CA 92064
P 858.679.4030 | F 858.513.0559
www.jce-inc.com

#22121 5/19/2023

E3.1

© 2020 Architects Gallegos + Eckle inc., dba AlphaStudio Design Group

T:\ASDG Projects\Active Projects\23-002 LUSD Central Kitchen Improvements\23-002 LUSD Central Kitchen Improvements_Draft_23-03-17.pln

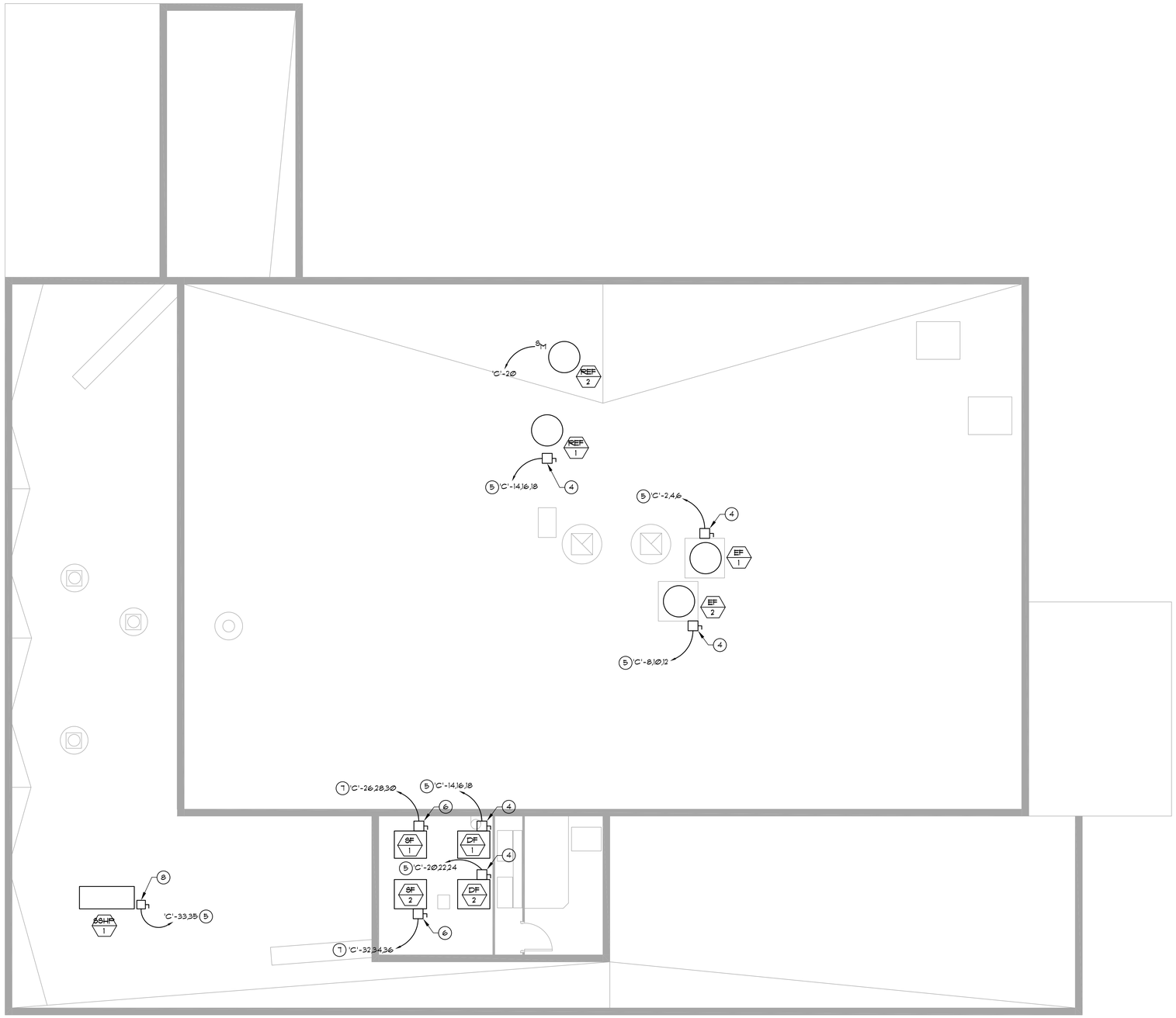

1 KITCHEN ROOF PLAN

SCALE: 1/4" = 1'-0"

0 2' 4' 6'

GENERAL NOTES:

1. REFERENCE MECHANICAL PLANS FOR EXACT EQUIPMENT LOCATIONS PRIOR TO ROUGH-IN.
2. DASHED EQUIPMENT INDICATES THAT EQUIPMENT IS LOCATED WITHIN CEILING SPACE. ALL OTHER EQUIPMENT IS ROOF MOUNTED (U.O.N.).
3. ALL CONDUIT FEEDERS TO ROOF MOUNTED EQUIPMENT SHALL BE RUN CONCEALED IN CEILING SPACE WHERE EQUIPMENT CURBS ARE PROVIDED. ROUTE FEEDER UP THROUGH CURB TO EQUIPMENT DISCONNECT.
4. REFERENCE SHEET E6 SERIES MECHANICAL EQUIPMENT SCHEDULE FOR CONDUIT, WIRE AND DISCONNECT REQUIREMENTS.
5. REFERENCE E5. SERIES SHEETS FOR UNITS WHICH REQUIRE DUCT TYPE SMOKE DETECTOR CONNECTIONS.

KEY NOTES:

1. CONTINUE TO ALL FIRE DAMPERS AND DUCT DETECTORS THIS BUILDING. SEE FIRE ALARM PLANS FOR EXACT LOCATION.
2. FIRE ALARM DAMPER AND DUCT DETECTOR POWER CONNECTION. SEE DETAILS FOR REQUIREMENTS ON FIRE ALARM PLANS.
3. ROOF HATCH SECURITY CONTACT PROVIDE 1/2" CONDUIT TO BUILDING COMMUNICATIONS CABINET.
4. 30AMP/3P/3R DISCONNECT SWITCH WITH 20AMP FUSES.
5. 3/4"C., (3) #10, (1) #10 GND.
6. 60 AMP/3P/3R DISCONNECT SWITCH WITH 35 AMP FUSES.
7. 1"C. (3) #6, 1 #10 GND.
8. 30 AMP/2P/3R DISCONNECT SWITCH WITH 30 AMP FUSES.

ALPHASTUDIO DESIGN GROUP

6152 INNOVATION WAY
CARLSBAD, 92009
760-431-2444
www.alphastudio-design.com

ARCHITECT OF RECORD

LICENSED ARCHITECT
PAUL R. GALLEGOS
No. C24063
EXP. 01/25
STATE OF CALIFORNIA

ENGINEER OF RECORD

CENTRAL KITCHEN IMPROVEMENTS

LAKESIDE UNION SCHOOL DISTRICT

12335 WOODSIDE AVE
LAKESIDE, CA 92040

LAKESIDE UNION SCHOOL DISTRICT
12335 WOODSIDE AVE LAKESIDE CA 92040

REVISIONS

MARK	DATE	DESCRIPTION

PROJECT NO: #Pln

MODEL FILE:
23-002 LUSD Central Kitchen Improvements_Draft_23-03-17.pln

PLOT DATE:
4/26/2023

SHEET TITLE

KITCHEN ROOF PLAN

REGISTERED PROFESSIONAL ENGINEER
No. E 14781
Exp. 6-30-2025
ELECTRICAL
STATE OF CALIFORNIA

#22121 5/15/2023

JOHNSON CONSULTING ENGINEERS, INC.
Power | Lighting | Multimedia
Communications | Data Networking
12875 Brookprinter Place, Suite 300
Poway, CA 92064
P 858.679.4030 | F 858.513.0559
www.jce-inc.com

E6.1

© 2020 Architects Gallegos + Eckle inc. dba AlphaStudio Design Group

T:\ASDG Projects\Active Projects\23-002 LUSD Central Kitchen Improvements\23-002 LUSD Central Kitchen Improvements_Draft_23-03-17.pln

120/208	120/208 3PH, 4WIRE	300 AMP	Main	Breaker	X		ENCLOSURE TYPE		ENCLOSURE NOTE		
	200% Neutral Bus			Lug		x	NEMA TYPE 1				
	(INTEGRAL)TVSS Protection		Enclosure	Recessed	X		NEMA TYPE 3R				
C	(REMOTE)TVSS Protection			Surface			NEMA TYPE 4X				
	Service Entrance Rated	GENERAL DISTRIBUTION	PROVIDE LOCK ON BREAKER DEVICES FOR ALL EMERGENCY LIGHTING,								
	Load Side Feed thru Lugs	BREAKER REQUIREMENTS :	MOTORS, AND FIRE ALARM EQUIPMENT SERVED FROM THIS PANEL								

LCL	NHL	CIRCUIT DESCRIPTION	AMP	POLE	NO	PHASE A	PHASE B	PHASE C	NO	AMP	POLE	CIRCUIT DESCRIPTION	LCL	NHL
		range	20	1	1	1000			2	20	3	EF-1	X	
						1000								
		range	20	1	3		1000		4				X	
							1000							
		range	20	1	5			1300	6				X	
								1000						
		range	20	1	7	1300			8	20	3	EF-2	X	
						1000								
		hood	20	1	9		400		10				X	
							1000							
		suppresion	20	1	11			400	12				X	
								1000						
X		lighting	20	1	13	1400			14	20	3	KEF-1	X	
						700								
		spare	20	1	15		700		16				X	
		spare	20	1	17			700	18				X	
		spare	20	1	19				20	20	1	KEF-2	X	
						600								
		spare	20	1	21		500		22	20	3	DF-1	X	
		water heater	60	3	23			5000	24				X	
								500						
					25	5000			26				X	
						500								
					27		5000		28	20	3	DF-2	X	
							500							
X		SSFC	20	2	29			800	30				X	
								500						
X					31	800			32				X	
						500								
X			20	2	33		800		34	40	3	SF-1	X	
							4000							
X					35			800	36				X	
								4000						
X		SF-2	40	3	37	4000			38				X	
						4000								
X					39		4000		40	20	1	SPACE		
X					41			4000	42	20	1	SPACE		

SPECIAL PANEL NOTE				NOTE #1				
				NOTE #2				
NHL= Non Harmonic Load	TOTAL LOAD PER PHASE	21800	18900	20000				
LCL= Long Continuous Load	25% LONG CONTINUOUS LOADS	3625	3125	3325	HIGH PHASE	25425	/ 0.9pf = VA @ 120V	235.4 AMPS
					ALL PHASES	70775	/ 0.9pf = VA @ 208V/3PH	218.4 AMPS
	SUB PANEL							
Max. Neut. Load	SUB PANEL				DEMAND PER			
309 AMPS	TOTAL CONNECTED LOAD	25425	22025	23325	CEC 220-86			AMPS

M:\Panel Schedule\2022\22121 Lakeside kitchen\Master - 3PH - Panel.xls 7:58 AM5/15/2023

I.D.	600Volt Feeder Schedule							
	Type	Ampacity	Copper			Aluminum		
			Conduit	Conductors		Conduit	Conductors	
30B		300	(1)	3"	4 # 350, 1# 3 Gnd	(1)	3"	4 # 500, 1# 2 Gnd

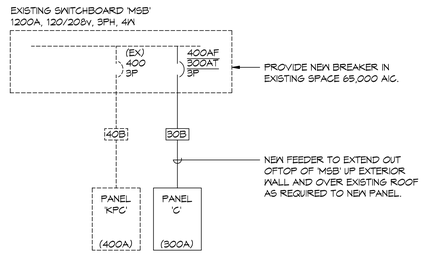

ONE-LINE DIAGRAM
NO SCALE

1
E7.1

600V FEEDER SCHEDULE GENERAL NOTES:

1. ALL CONDUCTOR SHALL BE PROVIDED WITH TYPE THWN-2 INSULATION. REFERENCE SPECIFICATION SECTION 26 05 19 (16120) FOR ADDITIONAL REQUIREMENTS.
2. PROVIDE 60 DEGREE COPPER/ALUMINUM RATED TERMINATION FOR ALL FEEDERS SIZED WITH #2 OR SMALLER CONDUCTORS, PROVIDE 75 DEGREE COPPER/ALUMINUM RATED TERMINATIONS FOR ALL FEEDERS SIZED WITH #1 OR LARGER CONDUCTORS.
3. CONTRACTOR SHALL BE RESPONSIBLE FOR ORDERING LUG CONFIGURATION AN ALL EQUIPMENT, BREAKER OF DISCONNECTS TO MATCH FEEDER CONFIGURATIONS INDICATED.
4. WHERE MULTIPLE CONDUIT QUANTITIES ARE INDICATED, CONDUCTOR QUANTITIES AND SIZES SHOWN IN SCHEDULE SHALL BE PROVIDED IN EACH CONDUIT.

GENERAL NOTES:

1. A FAULT CURRENT AND TIME CURRENT STUDY MUST BE PROVIDED AS DESCRIBED IN THE SPECIFICATIONS PRIOR TO FINAL APPROVAL OF THE POWER EQUIPMENT.
2. UNLESS WHERE OTHERWISE NOTED, ALL WORK INDICATED ON THESE DRAWINGS SHALL BE CONSIDERED NEW WORK.

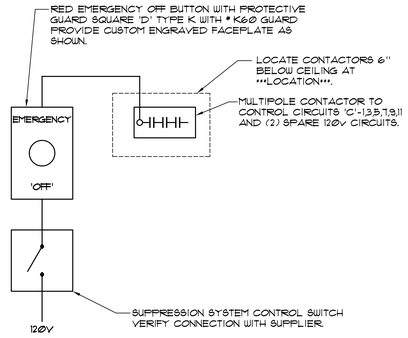

KITCHEN EMERGENCY SHUTOFF DIAGRAM
NO SCALE

2
E7.1

ALPHASTUDIO DESIGN GROUP
6152 INNOVATION WAY
CARLSBAD, 92009
760-431-2444
www.alphastudio-design.com

ARCHITECT OF RECORD

LICENSED ARCHITECT PAUL R. GALLEGOS No. C24063 EXP. 01/25 STATE OF CALIFORNIA

ENGINEER OF RECORD

CENTRAL KITCHEN IMPROVEMENTS
LAKESIDE UNION SCHOOL DISTRICT

12335 WOODSIDE AVE
LAKESIDE, CA 92040

LAKESIDE UNION SCHOOL DISTRICT
12335 WOODSIDE AVE LAKESIDE CA 92040

REVISIONS

MARK	DATE	DESCRIPTION

PROJECT NO: #Pln
MODEL FILE:
23-002 LUSD Central Kitchen Improvements_Draft_23-03-17.pln
PLOT DATE:
4/26/2023

SHEET TITLE
ONLE LINE DIAGRAM

REGISTERED PROFESSIONAL ENGINEER No. E 14781 Exp. 6-30-2025 ELECTRICAL STATE OF CALIFORNIA

JOHNSON CONSULTING ENGINEERS, INC.
Power | Lighting | Multimedia
Communications | Data Networking
12875 Brookprinter Place, Suite 300
Poway, CA 92064
P 858.679.4030 | F 858.513.0559
www.jce-inc.com

#22121 5/19/2023

E7.1

© 2020 Architects Gallegos + Eckle inc. dba AlphaStudio Design Group

T:\ASDG Projects\Active Projects\23-002 LUSD Central Kitchen Improvements\23-002 LUSD Central Kitchen Improvements_Draft_23-03-17.pln

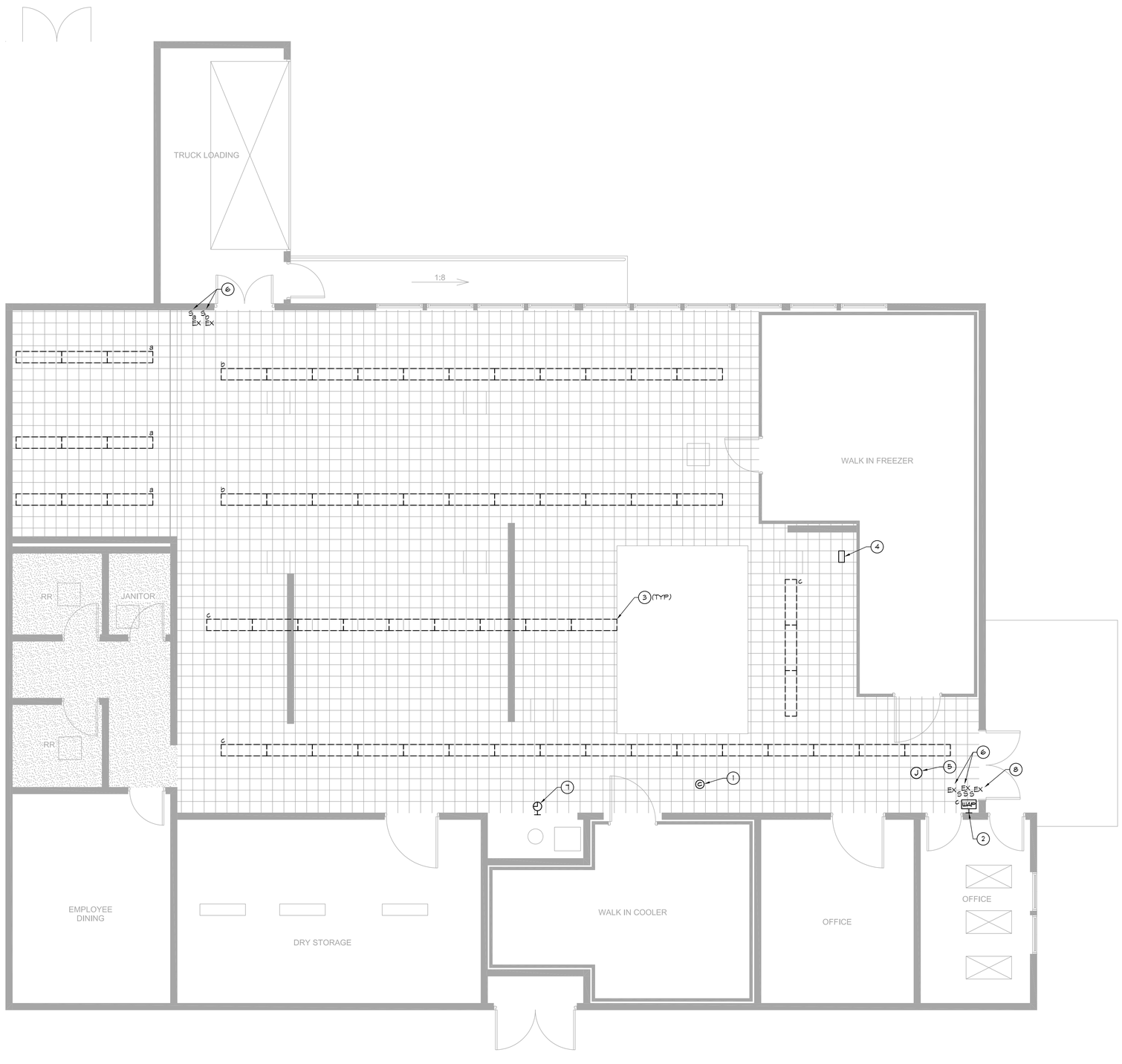

1 REFLECTED CEILING PLAN - DEMO

SCALE: 1/4" = 1'-0"

DEMOLITION GENERAL NOTES:

1. ALL ITEMS SHOWN ON THIS DRAWING ARE EXISTING TO BE REMOVED UNLESS OTHERWISE NOTED. SEE REQUIREMENTS BELOW FOR SCOPE OF WORK. ALL OTHER ELECTRICAL ITEMS IN THIS BUILDING ARE EXISTING TO REMAIN, MAINTAIN POWER CIRCUIT CONTINUITY UNTIL NEW SOURCE IS ENERGIZED AND READY FOR TRANSFER, REFER TO POWER AND LIGHTING PLANS.
2. ALL ELECTRICAL DEMOLITION WORK SHALL BE DIRECTED BY THE ELECTRICAL CONTRACTOR.

GENERAL DEMOLITION REQUIREMENTS

1. LIGHTING FIXTURES
   WHERE EXISTING LIGHTING FIXTURES ARE TO BE REMOVED, AND ARE NOT RELOCATED, CONTRACTOR SHALL DISPOSE OF ALL FIXTURES INCLUDING LAMPS AND BALLAST.
2. WIRING DEVICES
   WHERE EXISTING SWITCHES OR RECEPTACLES ARE TO BE REMOVED, THE CONTRACTOR SHALL DISPOSE OF ALL DEVICES AS REQUIRED.
3. COMMUNICATION DEVICES
   WHERE EXISTING TELEPHONE/INTERCOM AND CLOCK HEAD END EQUIPMENT, PHONES, SPEAKERS AND OTHER ASSOCIATED EQUIPMENT ARE TO BE REMOVED, THE CONTRACTOR SHALL DISPOSED OF ALL DEVICES AND EQUIPMENT AS REQUIRED.
4. POWER EQUIPMENT
   WHERE EXISTING SWITCHBOARDS, PANELBOARDS, LOAD CENTERS, TRANSFORMERS, DISCONNECT SWITCHES OR OTHER DISTRIBUTION EQUIPMENT ARE TO BE REMOVED, THE CONTRACTOR SHALL DISPOSED OF ALL DEVICES AND EQUIPMENT AS REQUIRED.
5. ALL BOXES, EXPOSED CONDUIT, WIRE, AND OTHER ITEMS ASSOCIATED WITH ELECTRICAL EQUIPMENT TO BE REMOVED, SHALL BE DISCONNECTED, REMOVED AND DISPOSED OF BY THE CONTRACTOR AS REQUIRED, UNLESS SPECIFICALLY NOTED OTHERWISE. CUT AND CAP CONCEALED CONDUITS, PATCH, SEAL AND REPAIR SURFACE TO MATCH ADJACENT AREA WHERE BOXES ARE REMOVED.

KEY NOTES:

1. EXISTING CAMERA TO BE RELOCATED TO NEW CEILING AS REQUIRED.
2. EXISTING WIRELESS ACCESS POINT TO BE RELOCATED TO BELOW NEW CEILING.
3. EXISTING LIGHTING TO BE REMOVED.
4. EXISTING 3 PORT DATA DROP TO BE LOWERED TO BELOW NEW CEILING.
5. EXISTING CEILING FAN TO BE REMOVED.
6. EXISTING SWITCH TO BE REMOVED.
7. DISCONNECT, REMOVE AND REINSTALL EXISTING CLOCK BELOW NEW CEILING.
8. EXISTING SWITCH TO REMAIN. PROVIDE NEW ENGRAVED COVER PLATE TO MATCH EXISTING.

ALPHASTUDIO DESIGN GROUP

6152 INNOVATION WAY
CARLSBAD, 92009
760-431-2444
www.alphastudio-design.com

ARCHITECT OF RECORD

LICENSED ARCHITECT
PAUL R. GALLEGOS
No. C24063
EXP. 01/25
STATE OF CALIFORNIA

ENGINEER OF RECORD

CENTRAL KITCHEN IMPROVEMENTS

LAKESIDE UNION SCHOOL DISTRICT

12335 WOODSIDE AVE
LAKESIDE, CA 92040

LAKESIDE UNION SCHOOL DISTRICT
12335 WOODSIDE AVE LAKESIDE CA 92040

REVISIONS

MARK	DATE	DESCRIPTION

PROJECT NO: #Pln

MODEL FILE:
23-002 LUSD Central Kitchen Improvements_Draft_23-03-17.pln

PLOT DATE:
4/26/2023

SHEET TITLE

REFLECTED CEILING PLAN - DEMO

REGISTERED PROFESSIONAL ENGINEER
MICHAEL JOHNSON
No. E 14781
Exp. 6-30-2025
ELECTRICAL
STATE OF CALIFORNIA

JOHNSON
CONSULTING ENGINEERS, INC.
Power | Lighting | Multimedia
Communications | Data Networking
12875 Brookprinter Place, Suite 300
Poway, CA 92064
P 858.679.4030 | F 858.513.0559
www.jce-inc.com

#22121 5/15/2023

E10.1

© 2020 Architects Gallegos + Eckle inc. dba AlphaStudio Design Group

T:\ASDG Projects\Active Projects\23-002 LUSD Central Kitchen Improvements\23-002 LUSD Central Kitchen Improvements_Draft_23-03-17.pln

PIPE MATERIALS SCHEDULE

DOMESTIC WATER PIPING ABOVE & BELOW GRADE, INSIDE BUILDING:

1. TYPE "L" COPPER TUBING, HARD DRAWN CONFORMING TO ASTM B 88, WITH WROUGHT COPPER SOLDER SWEAT FITTINGS CONFORMING TO ASTM B 16.22.
2. ANY WATER PIPING LOCATED BELOW GRADE SHALL BE ASTM B 88 TYPE "K" COPPER TUBING ANNEALED, WITH BRAZED JOINTS WRAPPED IN PE FILM.

CONDENSATE PIPING:

1. FOR COOLING COILS: TYPE "M" COPPER CONFORMING TO ASTM B 88M, TYPE C WITH WROUGHT COPPER FITTINGS CONFORMING TO ASTM B 16.22M. PROVIDE INSULATION ON ALL CONDENSATE PIPING WITHIN AND ON EXTERIOR OF BUILDING.

SEWER WASTE & STORM DRAIN PIPING BELOW GRADE:

1. SCHEDULE 40 SOLID-WALL PVC PIPE, ASTM D 2665, DRAIN, WASTE AND VENT PIPING, PVC SOCKET FITTINGS CONFORMING TO ASTM D 2665, SOCKET TYPE, MADE TO ASTM D 3311 DRAIN, WASTE, AND VENT PATTERNS. INSTALL BELOW SLAB/GRADE PVC PIPING PER ASTM D 2321.
2. SEWER, WASTE, VENT & STORM DRAIN PIPING BELOW FLOOR: CAST IRON "NO-HUB" CONFORMING TO CISPI 301 AND ASTM A 888, WITH NEOPRENE GASKET AND 300 SERIES STAINLESS STEEL CLAMPING DEVICE CONFORMING TO CISPI 310.

SEWER WASTE & STORM DRAIN PIPING ABOVE GRADE:

1. CAST IRON "NO-HUB" CONFORMING TO CISPI 301 AND ASTM A 888 WITH NEOPRENE GASKET AND 300 SERIES STAINLESS STEEL CLAMPING DEVICE CONFORMING TO CISPI 310.
   - A. DRAIN PIPING: HEAVY DUTY, SHIELDED, STAINLESS-STEEL COUPLINGS: WITH STAINLESS-STEEL SHIELD, STAINLESS-STEEL BANDS AND TIGHTENING DEVICES, AND ASTM C 564, RUBBER SLEEVE.
   - B. VENT PIPING: STANDARD, SHIELDED, CISPI 310 STAINLESS-STEEL COUPLINGS: WITH STAINLESS-STEEL SHIELD, STAINLESS-STEEL BANDS AND TIGHTENING DEVICES, AND ASTM C 564, RUBBER SLEEVE.
2. COPPER DWV TUBE: ASTM B 306, DRAINAGE TUBE, DRAWN TEMPER, WITH ASME B16.23,CAST COPPER OR ASME B16.29, WROUGHT COPPER, SOLDER JOINT FITTINGS.

NATURAL GAS PIPING:

1. SCHEDULE 40 BLACK STEEL, CONFORMING TO ASTM A53 WITH 150 PSIG MALLEABLE IRON THREADED FITTINGS CONFORMING TO ANSI/ASME B16.3
2. BELOW GRADE/SLAB : PE PIPE CONFORMING TO ASTM D 2513, SDR 11, AND PE FITTINGS CONFORMING TO ASTM D-2683, SOCKET-FUSION TYPE OR ASTM D-3261, WITH DIMENSIONS MATCHING PE PIPE. PE TRANSITION FITTINGS, FACTORY-FABRICATED FITTINGS WITH PE COMPLYING WITH ASTM D 2513, SDR 11. PROTECTIVE COATING FOR UNDERGROUND PIPING, FACTORY APPLIED, THREE-LAYER COATING OF EPOXY, ADHESIVE, AND PE.

PLUMBING GENERAL NOTES

1. CONTRACTOR SHALL CAREFULLY REVIEW THESE PLANS AND SPECIFICATIONS PRIOR TO BID. CONTRACTOR SHALL ALSO REVIEW PLANS AND SPECIFICATIONS OF OTHER RELATED TRADES (INCLUDING CIVIL, STRUCTURAL, AND ELECTRICAL) PRIOR TO BID TO INSURE AN ACCURATE UNDERSTANDING OF EXACT SCOPE OF WORK. ANY ITEMS REQUIRING CLARIFICATION SHALL BE BROUGHT TO THE ATTENTION OF THE ARCHITECT IN SUFFICIENT TIME TO BE INCORPORATED INTO THE BID.
2. CONTRACTOR SHALL VERIFY ALL EQUIPMENT MODEL NUMBERS, CAPACITIES, SIZES, VOLTAGES, AND ALL OTHER SCHEDULED INFORMATION WITH OTHER APPLICABLE TRADES AND WITH THE MANUFACTURER PRIOR TO INSTALLATION.
3. CONTRACTOR SHALL VERIFY ALL LOCATIONS, SIZES, POC'S, INVERT ELEVATIONS, AND AVAILABILITY OF ALL EXISTING UTILITIES PRIOR TO INSTALLATION OF ANY MATERIAL OR EQUIPMENT.
4. THESE DRAWINGS ARE ESSENTIALLY DIAGRAMMATIC AND ARE NOT INTENDED TO INDICATE ALL DETAILS AND NECESSARY OFFSETS OF PIPING. THE CONTRACTOR SHALL INSTALL MATERIAL AND EQUIPMENT IN A MANNER AS TO CONFORM TO STRUCTURE, AVOID OBSTRUCTIONS, PRESERVE HEADROOM, AND KEEP OPENINGS AND PASSAGEWAYS CLEAR. ALL INSTALLATIONS SHALL BE CONSISTENT WITH NORMALLY ACCEPTABLE INDUSTRY STANDARDS.
5. THE CONTRACTOR SHALL NOTIFY THE ARCHITECT IN WRITING OF ANY DISCREPANCIES OR CONFLICTS THAT WOULD AFFECT THE SYSTEM PERFORMANCE OR INCUR ADDITIONAL COSTS. THIS NOTIFICATION SHALL BE SUBMITTED PRIOR TO INSTALLATION OF THE ITEMS CONCERNED.
6. NEW AND/OR EXISTING EQUIPMENT INDICATED ON THIS DRAWING IS SHOWN IN APPROXIMATE POSITION(S). CONTRACTOR SHALL FIELD VERIFY ALL EXISTING CONDITIONS INCLUDING EQUIPMENT LOCATIONS, POC'S AND STRUCTURAL MEMBERS PRIOR TO INSTALLATION. IN ALL CASES, ADEQUATE ACCESS (PER MANUFACTURERS RECOMMENDATIONS AND CODE COMPLIANCE) FOR MAINTENANCE AND REPLACEMENT OF EQUIPMENT SHALL BE PROVIDED.
7. ALL WORK SHALL BE DONE IN ACCORDANCE WITH ALL APPLICABLE CODES. NOTHING SHOWN ON THE PLANS OR STATED IN THE SPECIFICATIONS IS INTENDED TO INDICATE THAT THE INSTALLATIONS OR CONNECTIONS OF ANY ITEM OR DEVICE SHOULD BE DONE CONTRARY TO MANUFACTURERS INSTRUCTIONS AND ALL APPLICABLE CODES AND REGULATIONS.
8. THE CONTRACTOR IS RESPONSIBLE TO INSURE THAT THE INSTALLATIONS AND CONNECTIONS OF ALL ITEMS AND DEVICES CONFORM TO MANUFACTURERS INSTRUCTIONS AND TO ALL APPLICABLE CODES AND REGULATIONS.
9. SUBSTITUTION OF PLUMBING EQUIPMENT WITH EFFICIENCIES LOWER THAN THOSE INDICATED ON THE PLANS MAY REQUIRE RE-CALCULATION OF TITLE 24 DOCUMENTS. IF THE CONTRACTOR CHOOSES TO UTILIZE SUCH EQUIPMENT, HE ASSUMES FULL RESPONSIBILITY FOR THE RE-CALCULATION AND JURISDICTIONAL APPROVAL OF TITLE 24 DOCUMENTS.
10. IF THE CONTRACTORS' USE OF SUBSTITUTE MATERIALS, EQUIPMENT OR METHODS OF INSTALLATION REQUIRES ANY CHANGES IN OTHER TRADES WORK FROM THAT SHOWN ON THE DRAWINGS, THE EXTRA COST OF THE OTHER TRADES WORK SHALL BE THE RESPONSIBILITY OF THE CONTRACTOR INITIATING THE SUBSTITUTION.
11. SUBMITTALS: APPROVAL OF THE SUBMITTALS DOES NOT RELEASE THE CONTRACTOR FROM OBLIGATIONS TO FULLY COMPLY WITH ALL REQUIREMENTS OF THE CONSTRUCTION DOCUMENTS OR APPLICABLE CODE REGULATIONS.
12. ALL PLUMBING EQUIPMENT, MATERIAL, AND ALL CONNECTIONS THERETO SHALL BE INSTALLED COMPLETE PER MANUFACTURERS INSTRUCTIONS TO PROVIDE A COMPLETE AND FULLY OPERATIONAL SYSTEM.
13. PLUMBING EQUIPMENT SHALL BE CERTIFIED BY AND COMPLY WITH THE STATE OF CALIFORNIA ENERGY CONSERVATION STANDARDS (E.E.S.) SECTION 110.3. COMPLIANCE CERTIFICATES SHALL BE PROVIDED WITH EQUIPMENT SUBMITTALS.
14. WHERE NON-METALLIC PIPING PENETRATES AREA SEPARATION, 1 HOUR, OR 2 HOUR WALLS, THE PIPE SECTION PASSING THROUGH THE WALLS AND EXTENDING A DISTANCE OF 5 FEET ON EITHER SIDE THERE-OF SHALL BE OF METAL ONLY.
15. ALL CONDENSATE PIPING SHALL BE INSULATED FROM THE EQUIPMENT TO THE POINT OF DISCHARGE.
16. ALL INSULATING MATERIALS INSTALLED MUST BE CERTIFIED BY CALIFORNIA ENERGY COMMISSION TO MEET C.E.C. ENERGY EFFICIENCY STANDARDS (E.E.S.) SECTION 110.8, 120.3 AND 120.4.
17. PILOTLESS IGNITION OF GAS APPLIANCES SHALL COMPLY WITH BUILDING ENERGY EFFICIENCY STANDARDS (E.E.S.) SECTION 110.5.
18. WATER HEATERS FOR DOMESTIC HOT WATER SHALL COMPLY WITH THE STATE OF CALIFORNIA ENERGY EFFICIENCY STANDARDS (E.E.S.) SECTION 110.3.
19. ALL NATURAL GAS PIPING LOCATED EXPOSED ABOVE GRADE SHALL BE INSTALLED SO THAT THE INVERT ELEVATION OF SUCH PIPING SHALL BE KEPT AT LEAST 6" ABOVE GRADE OR STRUCTURE.
20. ALL HOSE BIBBS INSTALLED SHALL BE EQUIPPED WITH VACUUM BREAKERS.
21. LAVATORY FAUCETS IN ALL TOILET ROOMS SHALL BE THE SELF CLOSING TYPE.
22. SOIL, SEWER AND WASTE PIPING SHALL SLOPE AT 1/4" PER FOOT MINIMUM.
23. ALL PLUMBING SOLDER SHALL BE LEAD FREE.
24. ALL COMPONENTS OF POTABLE WATER SYSTEM, INCLUDING SHUT OFF VALVES, ANGLE STOPS, AND PLUMBING FIXTURES SHALL COMPLY WITH CALIFORNIA LAW AB 1953 AND SECTION 116875 OF THE CALIFORNIA HEALTH AND SAFETY CODE.
25. PROVIDE CLEANOUTS EVERY 100' AND AT ANY CHANGE OF DIRECTION EXCEEDING 135 DEGREES.

IMPORTANT NOTE FOR TRAP PRIMERS, REGARDLESS OF ANY OTHER DIRECTION PROVIDED IN DRAWINGS, SPECIFICATION OR MANUFACTURING GUIDANCE, ALL TRAP PRIMERS MUST BE INSTALLED PER CPC REQUIREMENT, IN REGARD TO THE HEIGHT ABOVE THE FIXTURE BEING SERVED AS WALL AS HAVING AN ACCESS PANEL OF SUFFICIENT SIZE TO ALLOW FOR REPLACEMENT. IN ADDITION, FOR CITY OF SAN DIEGO PROJECTS THE PIPING FROM THE TRAP PRIMER TO THE FIXTURE MUST BE HARD COPPER TYPE K WITH BRAZED FITTINGS. OTHER MATERIAL (SOFT, ANNEALED, ROLLED, PVC, CPVC, ETC) WILL NOT BE ACCEPTED. THIS DIRECTION HAS BEEN PROVIDED (AND CONFIRMED BY THE MEOR ON 2/2/2023) BY THE CITY OF SAN DIEGO SENIOR MECHANICAL INSPECTOR RICHARD GARCIA, 858-573-1229. THE MEOR DOES NOT ASSUME ANY LIABILITY FOR THIS DIRECTION AS IT DIFFERS FROM THE MEOR OPINION.

EXCAVATION NOTES

1. CONTRACTOR SHALL PROVIDE A SITE UTILITY LOCATOR SERVICE TO IDENTIFY ANY AND ALL UNDERGROUND UTILITY CONFLICTS IN RELATION TO TRENCH EXCAVATION, NEW PIPE INSTALLATION, AND BACKFILL REQUIREMENTS.
2. CONTRACTOR SHALL MEET WITH BUILDING OWNER AND INSPECTOR PRIOR TO ANY TRENCHWORK. CONTRACTOR SHALL PROVIDE EXACT TRENCH ROUTE SHOP DRAWINGS, OVERLAYED WITH THE SITE UTILITY LOCATOR UTILITY LOCATIONS FOR OWNER'S REVIEW PRIOR TO MEETING.
3. CONTRACTOR SHALL HAND DIG IN ALL AREAS WITHIN 60" OF EXISTING UTILITIES, AS DISCOVERED DURING SITE UTILITY LOCATOR.
4. CONTRACTOR SHALL NOTIFY BUILDING OWNER/PROJECT MANAGER 14 DAYS PRIOR TO ANY EXCAVATION.
5. CONTRACTOR SHALL FOLLOW ALL APPLICABLE CODES AND REGULATION GUIDELINES FOR EXCAVATION, TRENCHING, BACKFILLING, AND COMPACTION.

SPECIAL NOTE TO PLUMBING CONTRACTOR

THE DESIGN OF THIS PROJECT WAS BASED UPON INFORMATION CONTAINED IN DRAWINGS PROVIDED BY THE PROPERTY OWNER. DISCREPANCIES BETWEEN INDICATED AND ACTUAL FIELD CONDITIONS MAY EXIST. IT IS A REQUIREMENT THAT THE CONTRACTOR VISIT THE SITE AND WALK THE JOB BEFORE SUBMITTING HIS BID AND SHALL MAKE ALL ALLOWANCES FOR PLAN/FIELD CONDITION DISCREPANCIES PRIOR TO SUBMITTING FOR BID. DURING THE CONSTRUCTION PROCESS IF A DISCREPANCY IS FOUND TO EXIST, THE CONTRACTOR SHALL DETERMINE A FIELD SOLUTION TO RESOLVE THE PROBLEM, AND THEN FORWARD THIS INFORMATION TO THE ARCHITECT FOR SUBMITTAL TO THE ENGINEER FOR APPROVAL. ADDITIONALLY, SEE PLUMBING GENERAL NOTES, SHEET P001.

COORDINATION NOTE

1. ALL WORK INDICATED AS BEING LOCATED MORE THAN 5'-0" FROM BUILDING IS FOR REFERENCE ONLY, SEE CIVIL DRAWINGS FOR SIZE, LOCATIONS, ROUTING OF WATER AND SEWER LATERALS, LOCATION OF BACKFLOW PREVENTERS, FIRE HYDRANTS, VALVES, ETC.

LEGEND

SYMBOL	ABBR.	DESCRIPTION
		SITE UTILITY CONNECTION
	POC	POINT OF CONNECTION
	POD	POINT OF DISCONNECTION
(E)	(E)	EXISTING PIPING - SEE PLANS FOR TYPE
		REMOVE EXIST. EQUIP. OR PIPES SHOWN HATCHED
	S OR W	SEWER OR WASTE BELOW FLOOR OR GRADE
	S OR W	SEWER OR WASTE ABOVE FLOOR OR GRADE
GW	GW	GREASE WASTE
SD	SD	STORM DRAIN
OD	OD	OVERFLOW STORM DRAIN
D	D	INDIRECT DRAIN
PD	PD	PUMPED DISCHARGE
OCD	OCD	OVERFLOW CONDENSATE DRAIN
CD	CD	CONDENSATE DRAIN
V	V	SANITARY VENT
	CW	COLD WATER (DOMESTIC)
	HW	HOT WATER (DOMESTIC)
	HWR	HOT WATER RETURN
TW	TW	TEMPERED WATER
TWR	TWR	TEMPERED WATER RETURN
WSP	WSP	WET STANDPIPE
F	F	FIRE LINE
G	G	LOW PRESSURE NATURAL GAS
MPG	MPG	MEDIUM PRESSURE NATURAL GAS (5 PSI)
HPG	HG	HIGH PRESSURE NATURAL GAS (30 -60 PSI)
	BP	BACKFLOW PREVENTER (REDUCED PRESS. TYPE)
	GV	GATE VALVE
	PIV	POST INDICATOR VALVE
	BV	BALL VALVE
	CV	CHECK VALVE
	GC	GAS COCK
	PRV	PRESSURE REDUCING VALVE
	T& PV	TEMPERATURE & PRESSURE RELIEF VALVE
	STR.	STRAINER
	COTG	CLEAN-OUT TO GRADE
	FCO	FLOOR CLEAN OUT
	WCO	WALL CLEAN-OUT OR CLEAN-OUT BELOW FLOOR
	CL	CAPPED LINE
		DOWN OR DROP
		UP OR RISE
	FC	FLEXIBLE CONNECTION (PIPE)
	HB	HOSE BIBB
	PG	PRESSURE GAUGE WITH GAUGE COCK
		"TEE" BRANCH
		VALVE ON RISE OR DROP
	TP	TRAP PRIMER
	TH	THERMOMETER
	U	UNION
	WHA	WATER HAMMER ARRESTOR (P.D.I. SIZE)
		DIRECTION OF FLOW
		REDUCER
G	FDC	FIRE DEPARTMENT CONNECTION
	FS	FLOOR SINK
	FD	FLOOR DRAIN
	RD/OF	ROOF DRAIN / OVERFLOW DRAIN
	AD/DD	AREA DRAIN / DECK DRAIN
	A/C	ABOVE CEILING
	AT/C	AT CEILING OR STRUCTURE
	AB	ANCHOR BOLT
	AD	AREA DRAIN
	AFF	ABOVE FINISHED FLOOR
	AFG	ABOVE FINISHED GRADE
	AP	ACCESS PANEL
	ABV	ABOVE
	ARCH	ARCHITECT OR ARCHITECTURAL
	B/G	BELOW GRADE
	B/F	BELOW FLOOR
	B/S	BELOW SLAB
	BEL	BELOW
	CI	CAST-IRON
	CLG	CEILING
	CLR	CLEAR
	CONC	CONCRETE
	CONN	CONNECT OR CONNECTION
	CONT	CONTINUATION
	CONTR	CONTRACTOR
~	DIA	DIAMETER
	DN	DOWN
	DWGS	DRAWINGS
	ELECT	ELECTRICAL
	ELEV	ELEVATION
	EXIST	EXISTING
	°F	DEGREES FAHRENHEIT
	FFE	FINISH FLOOR ELEVATION
	FPM	FEET PER MINUTE
	FIN	FINISH OR FINISHED
	FLR	FLOOR
	FT	FEET OR FOOT
	GPM	GALLONS PER MINUTE
	HDR	HEADER
	HP	HORSEPOWER
	HVAC	HEATING, VENTILATION, & AIR CONDITIONING
	I.E.	INVERT ELEVATION
	INV	INVERT
	IVTR	INDUSTRIAL VENT THROUGH ROOF
	IW	IN WALL
	MAX	MAXIMUM
	MECH	MECHANICAL
	MFR.	MANUFACTURER
	MIN	MINIMUM
	MTD	MOUNTED
	N.C.	NORMALLY CLOSED
	N.I.C.	NOT IN CONTRACT
	NTS	NOT TO SCALE
	NO	NUMBER
	N.O.	NORMALLY OPEN
	OPER	OPERATING
	PD	PRESSURE DROP
	PSI	POUNDS PER SQUARE INCH
	PSIG	POUNDS PER SQUARE INCH GAUGE
	PLBG	PLUMBING
	QTY	QUANTITY
	SHT	SHEET
	SOV	SHUT- OFF VALVE
	ST	PLANT STEAM
	ST STL	STAINLESS STEEL
	SPEC	SPECIFICATION
⌀	SQ FT	SQUARE FEET OR SQUARE FOOT
	STRUCT	STRUCTURAL
	TEMP	TEMPERATURE
	TYP	TYPICAL
	UNO	UNLESS NOTED OTHERWISE
	VTR	VENT THROUGH ROOF
	W.C.	INCHES WATER COLUMN

ALPHASTUDIO DESIGN GROUP

6152 INNOVATION WAY
CARLSBAD, 92009
760-431-2444
www.alphastudio-design.com

ARCHITECT OF RECORD

ENGINEER OF RECORD

DEC ENGINEERS
10150 MEANLEY DRIVE STE 250
SAN DIEGO, CA 92131
P: 858 578.3270 F: 858 578.3273

CENTRAL KITCHEN IMPROVEMENTS
LAKESIDE UNION SCHOOL DISTRICT

12335 WOODSIDE AVE
LAKESIDE, CA 92040

LAKESIDE UNION SCHOOL DISTRICT
12335 WOODSIDE AVE LAKESIDE CA 92040

REVISIONS

MARK	DATE	DESCRIPTION

PROJECT NO: #PIn

MODEL FILE:
23-002 LUSD Central Kitchen Improvements_Draft_23-03-17.pln

PLOT DATE:
4/26/2023

SHEET TITLE

PLUMBING NOTES AND LEGEND

P001

© 2020 Architects Gallegos + Eckle inc. dba AlphaStudio Design Group

T:\ASDG Projects\Active Projects\23-002 LUSD Central Kitchen Improvements\23-002 LUSD Central Kitchen Improvements_Draft_23-03-17.pln

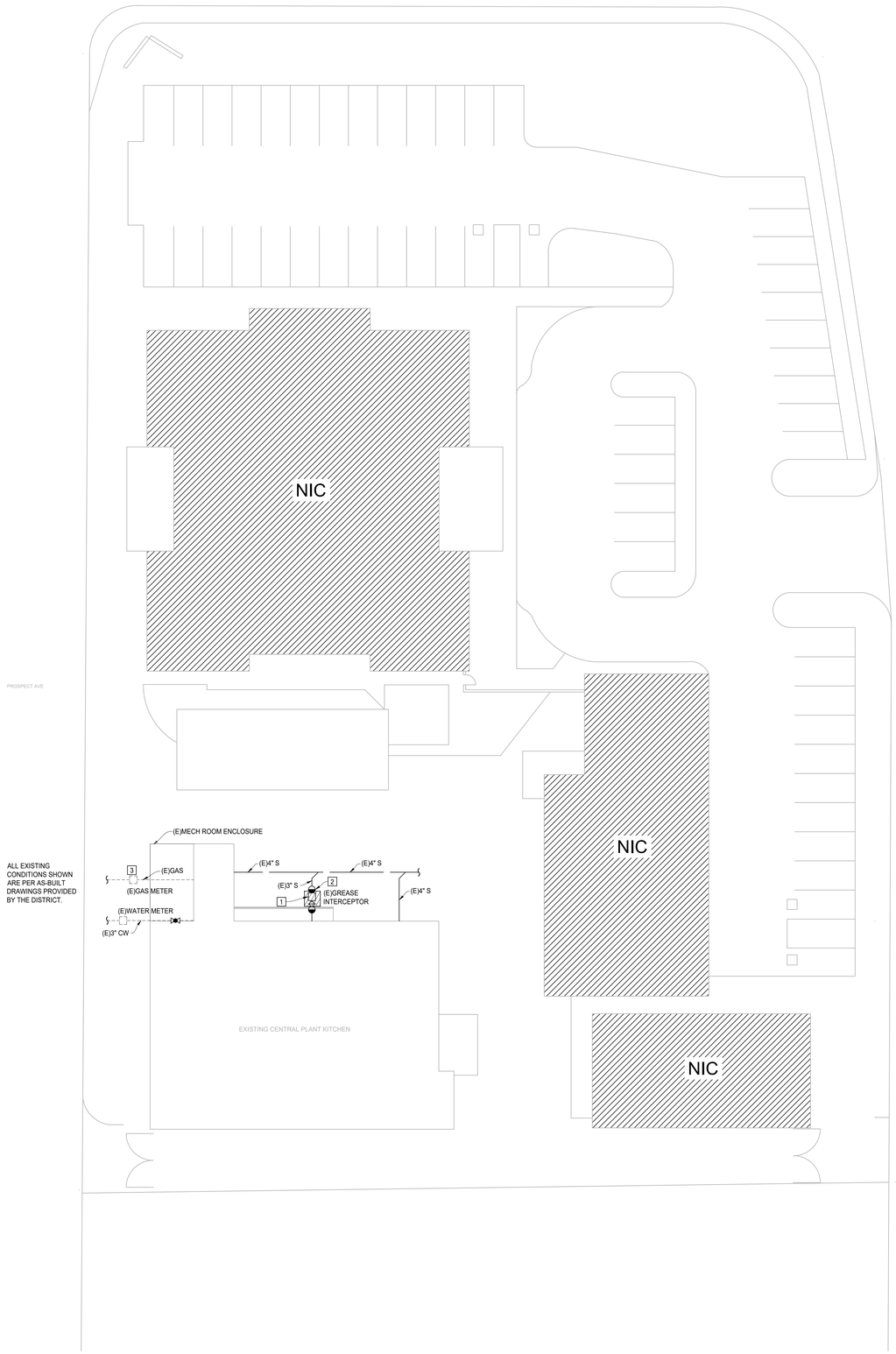

1 PLUMBING DEMOLITION SITE PLAN

SCALE: 1/16" = 1'-0"

16' 8' 0' 16' 32'
1/16" = 1' - 0"

DEMOLITION NOTES

1. DEMO EXISTING GREASE INTERCEPTOR BACK TO (E) 3" S CAP FOR FUTURE CONNECTIONS. SEE P100 FOR NEW ROUTING.
2. DEMO TO POD, CAP EXISTING 3" GW. SEE P101 FOR NEW ROUTING
3. (E) GAS METER, CAPACITY OF 5000 CFH. LOCATED ON BACK SIDE OF OUTDOOR MECHANICAL ROOM. CONTRACTOR TO FIELD VERIFY LOCATION AND CAPACITY PRIOR TO CONSTRUCTION, NOTIFY DESIGN TEAM OF ANY DISCREPANCIES.

ALPHASTUDIO DESIGN GROUP

6152 INNOVATION WAY
CARLSBAD, 92009
760-431-2444
www.alphastudio-design.com

ARCHITECT OF RECORD

ENGINEER OF RECORD

DEC ENGINEERS
10150 MEANLEY DRIVE STE 250
SAN DIEGO, CA 92131
P: 858 578.3270 F: 858 578.3273

CENTRAL KITCHEN IMPROVEMENTS

LAKESIDE UNION SCHOOL DISTRICT

12335 WOODSIDE AVE
LAKESIDE, CA 92040

LAKESIDE UNION SCHOOL DISTRICT
12335 WOODSIDE AVE LAKESIDE CA 92040

REVISIONS

MARK	DATE	DESCRIPTION

PROJECT NO: #PIn

MODEL FILE:
23-002 LUSD Central Kitchen Improvements_Draft_23-03-17.pln

PLOT DATE:
4/26/2023

SHEET TITLE

PLUMBING DEMOLITION SITE PLAN

PD100

© 2020 Architects Gallegos + Eckle Inc. dba AlphaStudio Design Group

T:\ASDG Projects\Active Projects\23-002 LUSD Central Kitchen Improvements\23-002 LUSD Central Kitchen Improvements_Draft_23-03-17.pln

DEMOLITION NOTES

1. REMOVE (E) WH AND ALL APPLICABLE APPURTENANCES. CAP GAS LINE TO (E) WH. SEE P601 FOR NEW EWH-1.
2. DEMO EXISTING GREASE INTERCEPTOR BACK TO POD OF (E)3" S B/G, CAP FOR FUTURE CONNECTIONS.
3. REMOVE (E) SINK AND CAP EXISTING SEWER IN WALL, PATCH AND REPAIR PER ARCHITECT. REPLACE WITH NEW 3 COMPARTMENT PER FOOD SERVICE DRAWINGS.
4. DEMO TO POD, CAP EXISTING 3" GW. SEE P101 FOR NEW ROUTING.

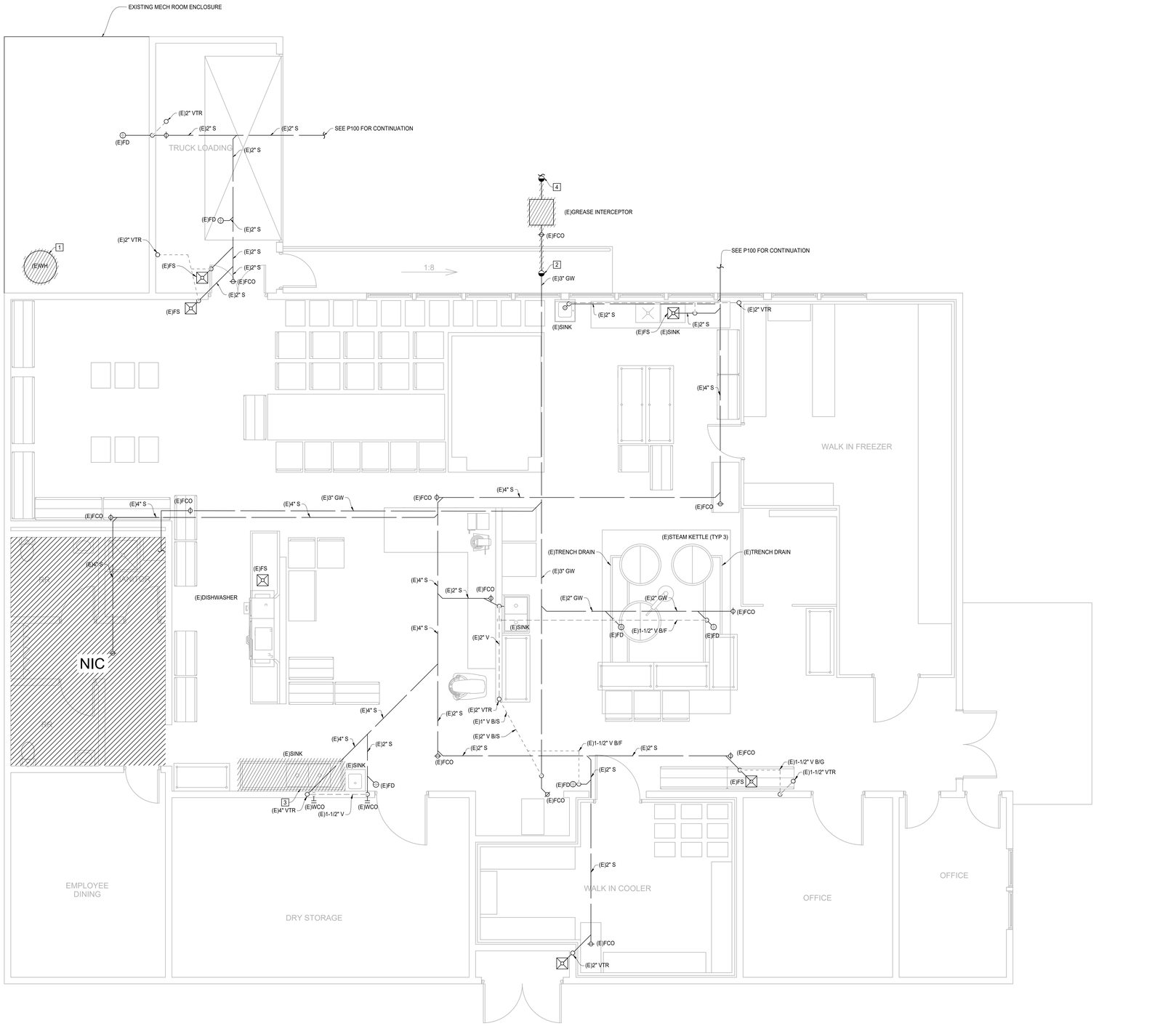

1 PLUMBING DEMOLITION WASTE AND VENT FLOOR PLAN

SCALE: 1/4" = 1'-0"

4' 2' 0' 4' 8'
1/4" = 1' - 0"

ALPHASTUDIO DESIGN GROUP

6152 INNOVATION WAY
CARLSBAD, 92009
760-431-2444
www.alphastudio-design.com

ARCHITECT OF RECORD

ENGINEER OF RECORD

DEC ENGINEERS
10150 MEANLEY DRIVE STE 250
SAN DIEGO, CA 92131
P: 858 578.3270 F: 858 578.3273

CENTRAL KITCHEN IMPROVEMENTS

LAKESIDE UNION SCHOOL DISTRICT

12335 WOODSIDE AVE
LAKESIDE, CA 92040

LAKESIDE UNION SCHOOL DISTRICT
12335 WOODSIDE AVE LAKESIDE CA 92040

REVISIONS

MARK	DATE	DESCRIPTION

PROJECT NO: #Pln

MODEL FILE:
23-002 LUSD Central Kitchen Improvements_Draft_23-03-17.pln

PLOT DATE:
4/26/2023

SHEET TITLE

PLUMBING DEMOLITION WASTE AND VENT FLOOR PLAN

PD101

© 2020 Architects Gallegos + Eckle Inc. dba AlphaStudio Design Group

T:\ASDG Projects\Active Projects\23-002 LUSD Central Kitchen Improvements\23-002 LUSD Central Kitchen Improvements_Draft_23-03-17.pln

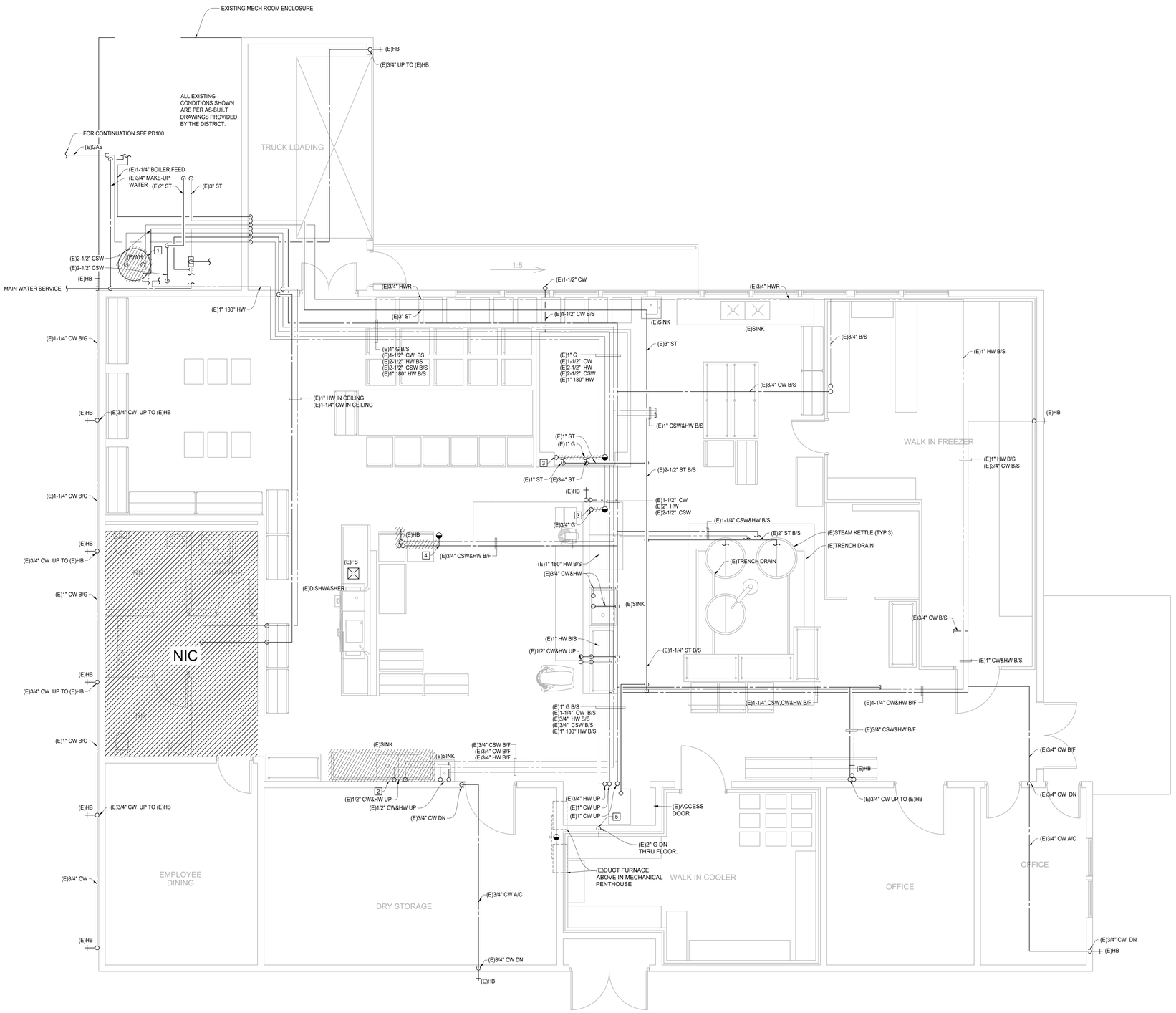

1 PLUMBING DEMOLITION WATER AND GAS FLOOR PLAN

SCALE: 1/4" = 1'-0"

4' 2' 0' 4' 8'
1/4" = 1' - 0"

SHEET NOTES

1. REMOVE (E) WH AND ALL APPLICABLE APPURTENANCES. CAP GAS LINE TO (E) WH. SEE P601 FOR NEW EWH-1.
2. DEMO EXISTING SINK AND (E) 1/2" HW AND CW RISER BACK TO (E) 3/4" CW AND HW LINES AT END OF RISER.
3. DEMO GAS LINE UP TO POD AND CAP BELOW FLOOR .
4. DEMO (E) 3/4" CW AND HW LINES UP TO POD. SEE P102 FOR NEW ROUTING.
5. CONTRACTOR TO TRACE BACK THE EXISTING GAS LINE THAT SERVES MECHANICAL EQUIPMENT IN PENTHOUSE.

ALPHASTUDIO DESIGN GROUP

6152 INNOVATION WAY
CARLSBAD, 92009
760-431-2444
www.alphastudio-design.com

ARCHITECT OF RECORD

ENGINEER OF RECORD

DEC ENGINEERS
10150 MEANLEY DRIVE STE 250
SAN DIEGO, CA 92131
P: 858 578.3270 F: 858 578.3273

CENTRAL KITCHEN IMPROVEMENTS

LAKESIDE UNION SCHOOL DISTRICT

12335 WOODSIDE AVE
LAKESIDE, CA 92040

LAKESIDE UNION SCHOOL DISTRICT
12335 WOODSIDE AVE LAKESIDE CA 92040

REVISIONS

MARK	DATE	DESCRIPTION

PROJECT NO: #PIn

MODEL FILE:
23-002 LUSD Central Kitchen Improvements_Draft_23-03-17.pln

PLOT DATE:
4/26/2023

SHEET TITLE

PLUMBING DEMOLITION WATER AND GAS FLOOR PLAN

PD102

© 2020 Architects Gallegos + Eckle inc. dba AlphaStudio Design Group

T:\ASDG Projects\Active Projects\23-002 LUSD Central Kitchen Improvements\23-002 LUSD Central Kitchen Improvements_Draft_23-03-17.pln

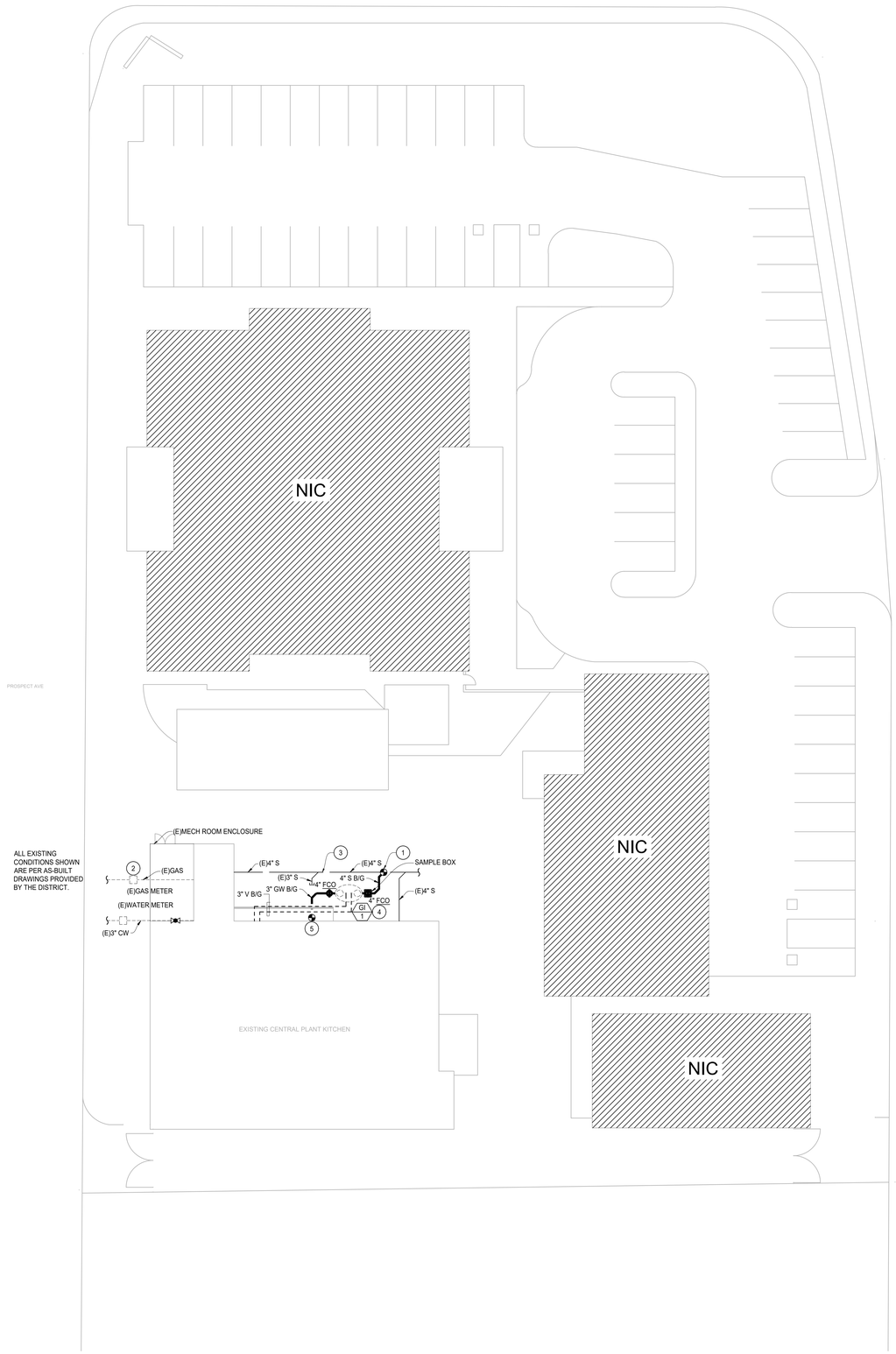

NEW WORK NOTES

1. POC BETWEEN (E) 4" S B/G AND 4" S B/G FROM GI-1. CONTRACTOR TO FIELD VERIFY LOCATION, SIZE AND INVERT ELEVATION OF EXISTING UNDERGROUND SANITARY SEWER LINE. NOTIFY DESIGN TEAM OF ANY DISCREPANCIES BEFORE CONSTRUCTION BEGINS.
2. (E) GAS METER, CAPACITY OF 5000 CFH. LOCATED ON BACK SIDE OF OUTDOOR MECHANICAL ROOM. CONTRACTOR TO FIELD VERIFY LOCATION AND CAPACITY PRIOR TO CONSTRUCTION, NOTIFY DESIGN TEAM OF ANY DISCREPANCIES.
3. CONTRACTOR TO MAKE ALLOWANCE IN BID TO RELOCATE EXISTING UNDERGROUND SEWER LINE FOR NEW GREASE INTERCEPTOR.
4. EXTEND INTERCEPTOR RISERS UP TO GRADE AS NECESSARY.
5. POC BETWEEN (E)3" GW B/G AND NEW 3" GW B/G TO GI-1.

1 PLUMBING NEW WORK SITE PLAN

SCALE: 1/16" = 1'-0"

16' 8' 0' 16' 32'
1/16" = 1' - 0"

ALPHASTUDIO DESIGN GROUP
6152 INNOVATION WAY
CARLSBAD, 92009
760-431-2444
www.alphastudio-design.com

ARCHITECT OF RECORD

ENGINEER OF RECORD

DEC ENGINEERS
10150 MEANLEY DRIVE STE 250
SAN DIEGO, CA 92131
P: 858 578.3270 F: 858 578.3273

CENTRAL KITCHEN IMPROVEMENTS

LAKESIDE UNION SCHOOL DISTRICT

12335 WOODSIDE AVE
LAKESIDE, CA 92040

LAKESIDE UNION SCHOOL DISTRICT
12335 WOODSIDE AVE LAKESIDE CA 92040

REVISIONS

MARK	DATE	DESCRIPTION

PROJECT NO: #PIn

MODEL FILE:
23-002 LUSD Central Kitchen Improvements_Draft_23-03-17.pln

PLOT DATE:
4/26/2023

SHEET TITLE

PLUMBING NEW WORK SITE PLAN

P100

© 2020 Architects Gallegos + Eckle inc. dba AlphaStudio Design Group

T:\ASDG Projects\Active Projects\23-002 LUSD Central Kitchen Improvements\23-002 LUSD Central Kitchen Improvements_Draft_23-03-17.pln

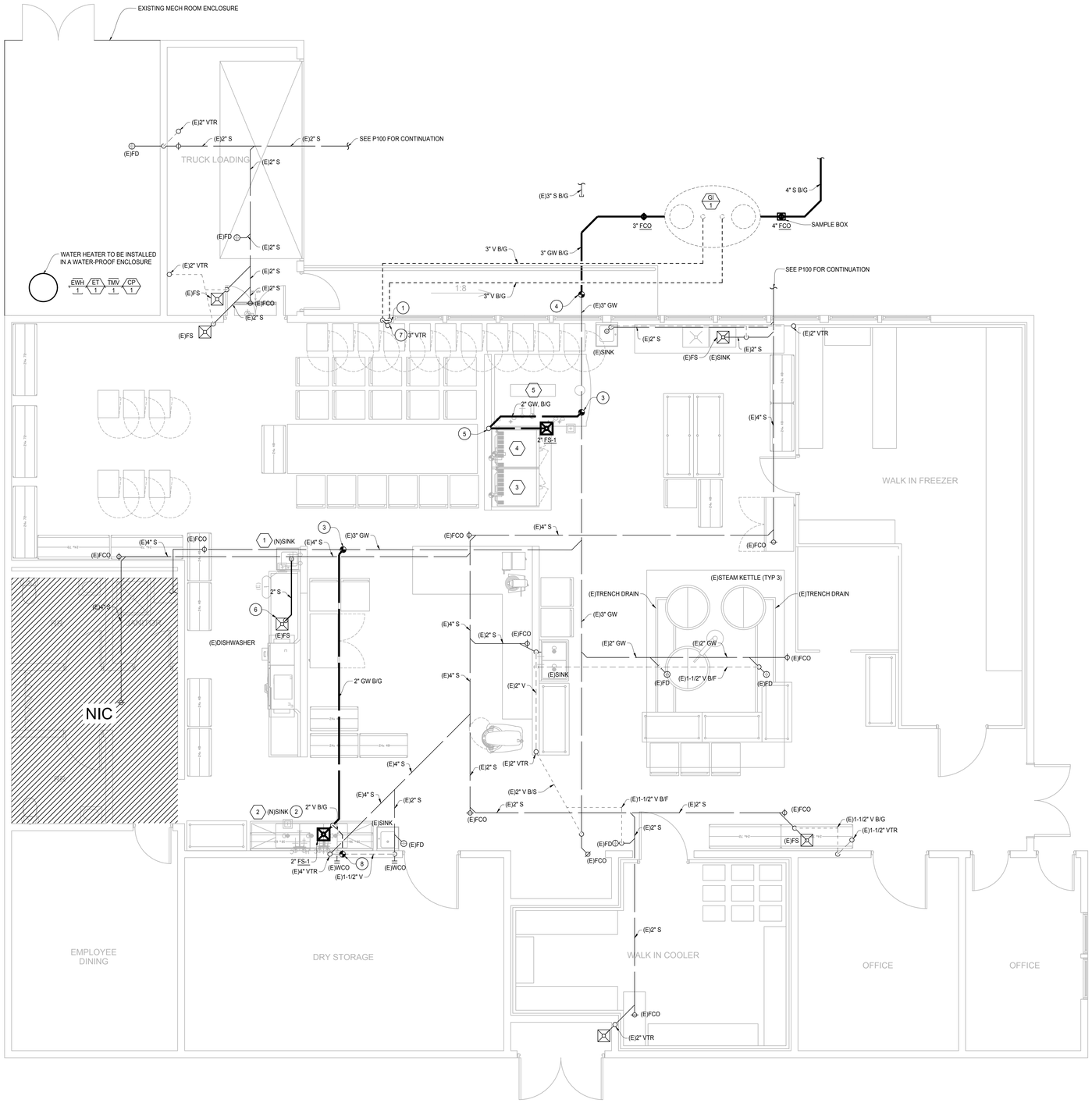

1 PLUMBING WASTE AND VENT NEW WORK FLOOR PLAN

SCALE: 1/4" = 1'-0"

4' 2' 0' 4' 8'
1/4" = 1' - 0"

NEW WORK NOTES

1. TIE NEW 3" V PIPING HORIZTONTALLY AT LEAST 6" ABOVE GRADE INTO 3" V RISER IN WALL.
2. ROUTE 2" S DOWN TO FS-1 PROVIDE A MINIMUM OF A 2" AIR GAP.
3. POC BETWEEN (E) 3" GW B/G AND 2" GW B/G FROM FS-1.
4. POC BETWEEN (E) 3" GW B/G AND GI-1.
5. PROVIDE 2" VTR, CONTRACTOR TO FIELD VERIFY LOCATION IS A MINIMUM OF 10 FEET AWAY FROM A CLEAN AIR INTAKE.
6. ROUTE 2" S FROM HAND SINK TO (E)FS PROVIDE A MINIMUM OF A 2" AIR GAP.
7. 3" VTR CONTRACTOR TO FIELD VERIFY LOCATION IS A MINIMUM OF 10 FEET FROM AN CLEAN AIR INTAKE.
8. POC BETWEEN 2" V B/G AND (E) VENT IN WALL.

ALPHASTUDIO DESIGN GROUP

6152 INNOVATION WAY
CARLSBAD, 92009
760-431-2444
www.alphastudio-design.com

ARCHITECT OF RECORD

ENGINEER OF RECORD

DEC ENGINEERS
10150 MEANLEY DRIVE STE 250
SAN DIEGO, CA 92131
P: 858 578.3270 F: 858 578.3273

CENTRAL KITCHEN IMPROVEMENTS

LAKESIDE UNION SCHOOL DISTRICT

12335 WOODSIDE AVE
LAKESIDE, CA 92040

LAKESIDE UNION SCHOOL DISTRICT
12335 WOODSIDE AVE LAKESIDE CA 92040

REVISIONS

MARK	DATE	DESCRIPTION

PROJECT NO: #Pln

MODEL FILE:
23-002 LUSD Central Kitchen Improvements_Draft_23-03-17.pln

PLOT DATE:
4/26/2023

SHEET TITLE

PLUMBING WASTE AND VENT NEW WORK FLOOR PLAN

P101

© 2020 Architects Gallegos + Eckle inc. dba AlphaStudio Design Group

T:\ASDG Projects\Active Projects\23-002 LUSD Central Kitchen Improvements\23-002 LUSD Central Kitchen Improvements_Draft_23-03-17.pln

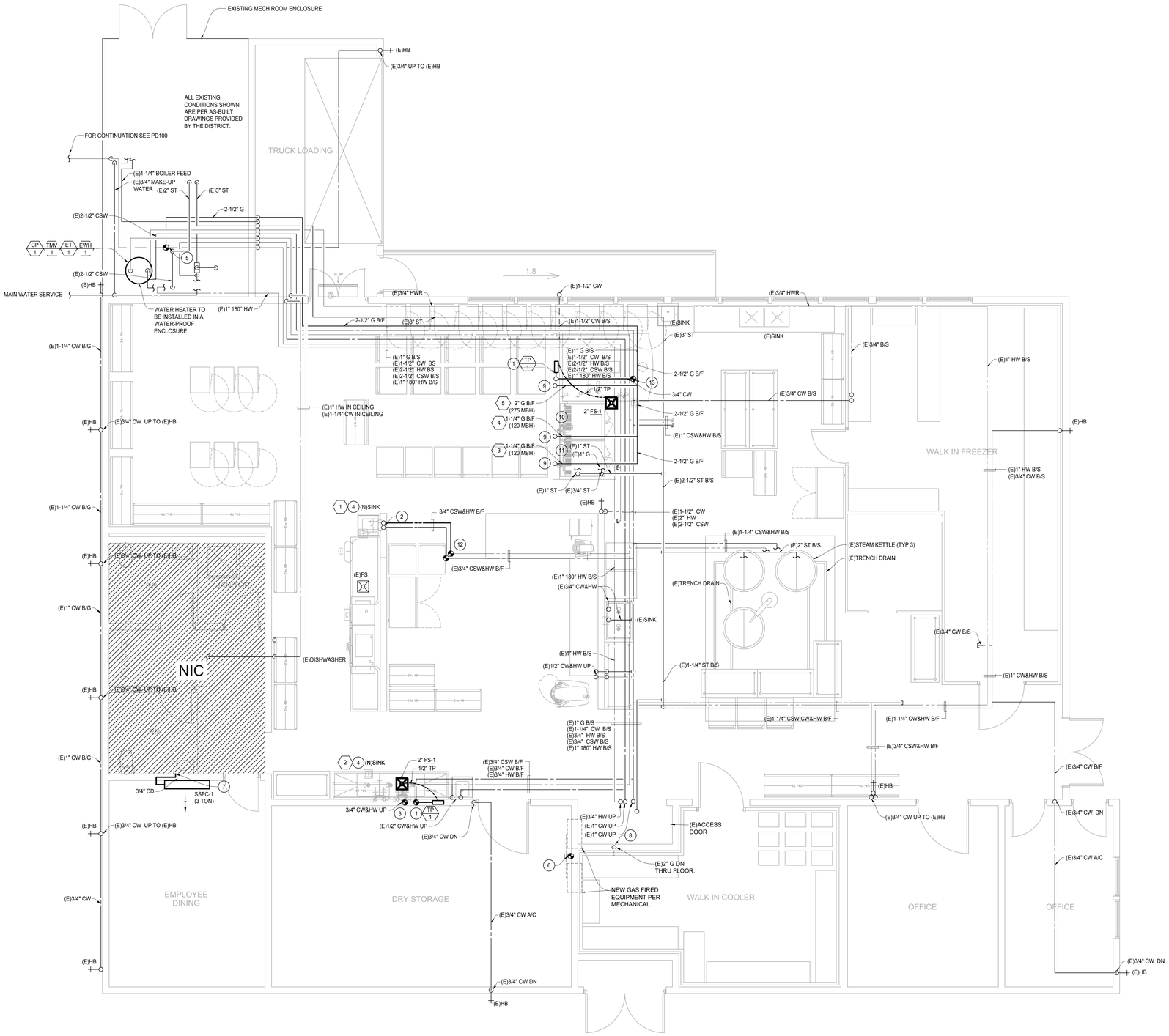

1 PLUMBING WATER AND GAS NEW WORK FLOOR PLAN

SCALE: 1/4" = 1'-0"

4' 2' 0' 4' 8'
1/4" = 1' - 0"

NEW WORK NOTES

1. POC OF 1/2" CW TO NEW 3/4" CW RISER, ROUTE 1/2" CW TO TP-1. PROVIDE AN ACCESSIBLE ACCESS PANEL.
2. 3/4" CSW AND HW UP TO NEW SINK.
3. POC BETWEEN 3/4" CW AND HW AND (E) 3/4" CW AND HW.
4. NEW SINK AND FAUCETS PER FOOD SERVICE DRAWINGS.
5. POC BETWEEN 2-1/2" G AND EXISTING GAS LINE. POC BEFORE EXISIITNG TEE FOR EXISIITNG GAS LINE TO BOILER.
6. PROVIDE NEW GAS CONNECTION TO NEW GAS FIRED EQUIPMENT IN MECHANICAL PENTHOUSE.
7. 3/4" CONDENSATE DOWN IN WALL AND CONNECT TO EXISTING SINK TAILPIECE.
8. CONTRACTOR TO TRACE BACK THE EXISTING GAS LINE THAT SERVES MECHANICAL EQUIPMENT IN PENTHOUSE.
9. GAS LINE UP PER SIZE ON DRAWINGS TO KITCHEN EQUIPMENT. CONNECT PER MANUFACTURER'S RECOMMENDATION.
10. EXISTING DOUBLE OVEN RELOCATED PER FOOD SERVICE DRAWINGS.
11. NEW DOUBLE OVEN PER FOOD SERVICE DRAWINGS.
12. POC BETWEEN (E)3/4" CSW AND HW, B/F AND 3/4" CSW AND HW. CONTRACTOR TO FIELD VERIFY SIZE AND LOCATION.
13. POC 3/4" CW AND (E) 1-1/2" CW LINE BELOW FLOOR, ROUTE RISER IN NEW WALL FOR KITCHEN EQUIPMENT AND TP-1.

ALPHASTUDIO DESIGN GROUP

6152 INNOVATION WAY
CARLSBAD, 92009
760-431-2444
www.alphastudio-design.com

ARCHITECT OF RECORD

ENGINEER OF RECORD

DEC ENGINEERS
10150 MEANLEY DRIVE STE 250
SAN DIEGO, CA 92131
P: 858 578.3270 F: 858 578.3273

CENTRAL KITCHEN IMPROVEMENTS

LAKESIDE UNION SCHOOL DISTRICT

12335 WOODSIDE AVE
LAKESIDE, CA 92040

LAKESIDE UNION SCHOOL DISTRICT
12335 WOODSIDE AVE LAKESIDE CA 92040

REVISIONS

MARK	DATE	DESCRIPTION

PROJECT NO: #PIn

MODEL FILE:
23-002 LUSD Central Kitchen Improvements_Draft_23-03-17.pln

PLOT DATE:
4/26/2023

SHEET TITLE

PLUMBING WATER AND GAS NEW WORK FLOOR PLAN

P102

© 2020 Architects Gallegos + Eckle Inc. dba AlphaStudio Design Group

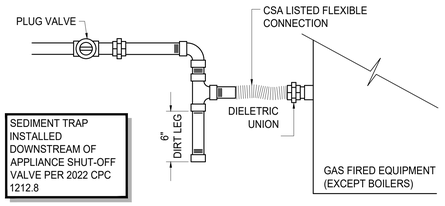

GAS CONNECTION

SCALE	1
NONE	

GAS CALCULCATION - LPG

EQUIPMENT	BTU HR LOAD	CFH LOAD
ROTATING OVEN	275	275
DOUBLE OVEN	120	120
1 (E) DOUBLE OVEN	120	120
-	-	-
-	-	-
-	-	-
-	-	-
TOTAL LOAD		515 CFH
TOTAL MEASURED LENGTH		530 FT.
TOTAL DEVELOPED LENGTH		700 FT.
GAS PIPING BASED AT LESS THAN 2 PSI		
GAS PIPING BASED ON 2022 CPC, TABLE 1215.2(1)		

1 GAS LOAD BY OWNER, CONTRACTOR TO VERIFY LOAD REQUIREMENTS AND SHALL INFORM DESIGN TEAM OF ANY DISCREPANICES.

FUEL GAS PIPING

TABLE 1215.2(1)
SCHEDULE 40 METALLIC PIPE [NFPA 54; TABLE 6.2.1(b)][1, 2]

GAS:	NATURAL
INLET PRESSURE:	LESS THAN 2 psi
PRESSURE DROP:	0.5 in. w.c.
SPECIFIC GRAVITY:	0.60

	PIPE SIZE (inch)													
NOMINAL:	½	¾	1	1¼	1½	2	2½	3	4	5	6	8	10	12
ACTUAL ID:	0.622	0.824	1.049	1.380	1.610	2.067	2.469	3.068	4.026	5.047	6.065	7.981	10.020	11.938
LENGTH (feet)	CAPACITY IN CUBIC FEET OF GAS PER HOUR													
10	172	360	678	1390	2090	4020	6400	11 300	23 100	41 800	67 600	139 000	252 000	399 000
20	118	247	466	957	1430	2760	4400	7780	15 900	28 700	46 500	95 500	173 000	275 000
30	95	199	374	768	1150	2220	3530	6250	12 700	23 000	37 300	76 700	139 000	220 000
40	81	170	320	657	985	1900	3020	5350	10 900	19 700	31 900	65 600	119 000	189 000
50	72	151	284	583	873	1680	2680	4740	9660	17 500	28 300	58 200	106 000	167 000
60	65	137	257	528	791	1520	2430	4290	8760	15 800	25 600	52 700	95 700	152 000
70	60	126	237	486	728	1400	2230	3950	8050	14 600	23 600	48 500	88 100	139 000
80	56	117	220	452	677	1300	2080	3670	7490	13 600	22 000	45 100	81 900	130 000
90	52	110	207	424	635	1220	1950	3450	7030	12 700	20 600	42 300	76 900	122 000
100	50	104	195	400	600	1160	1840	3260	6640	12 000	19 500	40 000	72 600	115 000
125	44	92	173	355	532	1020	1630	2890	5890	10 600	17 200	35 400	64 300	102 000
150	40	83	157	322	482	928	1480	2610	5330	9650	15 600	32 100	58 300	92 300
175	37	77	144	296	443	854	1360	2410	4910	8880	14 400	29 500	53 600	84 900
200	34	71	134	275	412	794	1270	2240	4560	8260	13 400	27 500	49 900	79 000
250	30	63	119	244	366	704	1120	1980	4050	7320	11 900	24 300	44 200	70 000
300	27	57	108	221	331	638	1020	1800	3670	6630	10 700	22 100	40 100	63 400
350	25	53	99	203	305	587	935	1650	3370	6100	9880	20 300	36 900	58 400
400	23	49	92	189	283	546	870	1540	3140	5680	9190	18 900	34 300	54 300
450	22	46	86	177	266	512	816	1440	2940	5330	8620	17 700	32 200	50 900
500	21	43	82	168	251	484	771	1360	2780	5030	8150	16 700	30 400	48 100
550	20	41	78	159	239	459	732	1290	2640	4780	7740	15 900	28 900	45 700
600	19	39	74	152	228	438	699	1240	2520	4560	7380	15 200	27 500	43 600
650	18	38	71	145	218	420	669	1180	2410	4360	7070	14 500	26 400	41 800
700	17	36	68	140	209	403	643	1140	2320	4190	6790	14 000	25 300	40 100
750	17	35	66	135	202	389	619	1090	2230	4040	6540	13 400	24 400	38 600
800	16	34	63	130	195	375	598	1060	2160	3900	6320	13 000	23 600	37 300
850	16	33	61	126	189	363	579	1020	2090	3780	6110	12 600	22 800	36 100
900	15	32	59	122	183	352	561	992	2020	3660	5930	12 200	22 100	35 000
950	15	31	58	118	178	342	545	963	1960	3550	5760	11 800	21 500	34 000
1000	14	30	56	115	173	333	530	937	1910	3460	5600	11 500	20 900	33 100
1100	14	28	53	109	164	316	503	890	1810	3280	5320	10 900	19 800	31 400
1200	13	27	51	104	156	301	480	849	1730	3130	5070	10 400	18 900	30 000
1300	12	26	49	100	150	289	460	813	1660	3000	4860	9980	18 100	28 700
1400	12	25	47	96	144	277	442	781	1590	2880	4670	9590	17 400	27 600
1500	11	24	45	93	139	267	426	752	1530	2780	4500	9240	16 800	26 600
1600	11	23	44	89	134	258	411	727	1480	2680	4340	8920	16 200	25 600
1700	11	22	42	86	130	250	398	703	1430	2590	4200	8630	15 700	24 800
1800	10	22	41	84	126	242	386	682	1390	2520	4070	8370	15 200	24 100
1900	10	21	40	81	122	235	375	662	1350	2440	3960	8130	14 800	23 400
2000	NA	20	39	79	119	229	364	644	1310	2380	3850	7910	14 400	22 700

For SI units: 1 inch = 25 mm, 1 foot = 304.8 mm, 1 cubic foot per hour = 0.0283 m^3/h, 1 pound-force per square inch = 6.8947 kPa, 1 inch water column = 0.249 kPa

Notes:

1 Table entries are rounded to 3 significant digits.

2 NA means a flow of less than 10 ft3/h (0.283 m^3/h).

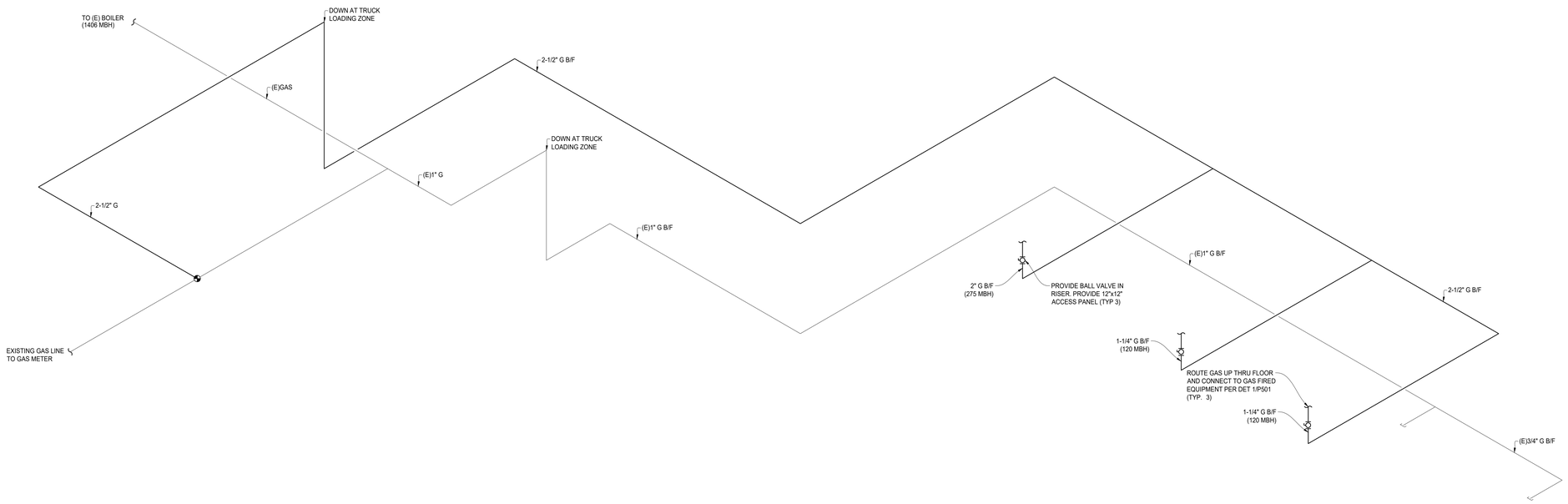

1 PLUMBING GAS ISOMETRIC DIAGRAM

SCALE: NO SCALE

ALPHASTUDIO DESIGN GROUP

6152 INNOVATION WAY
CARLSBAD, 92009
760-431-2444
www.alphastudio-design.com

ARCHITECT OF RECORD

ENGINEER OF RECORD

DEC ENGINEERS
10150 MEANLEY DRIVE STE 250
SAN DIEGO, CA 92131
P: 858 578.3270 F: 858 578.3273

CENTRAL KITCHEN IMPROVEMENTS

LAKESIDE UNION SCHOOL DISTRICT

12335 WOODSIDE AVE
LAKESIDE, CA 92040

LAKESIDE UNION SCHOOL DISTRICT
12335 WOODSIDE AVE LAKESIDE CA 92040

REVISIONS

MARK	DATE	DESCRIPTION

PROJECT NO: #PIn

MODEL FILE:
23-002 LUSD Central Kitchen Improvements_Draft_23-03-17.pln

PLOT DATE:
4/26/2023

SHEET TITLE

PLUMBING GAS ISOMETRIC DIAGRAM

P501

T:\ASDG Projects\Active Projects\23-002 LUSD Central Kitchen Improvements\23-002 LUSD Central Kitchen Improvements_Draft_23-03-17.pln

© 2020 Architects Gallegos + Eckle Inc. dba AlphaStudio Design Group

T:\ASDG Projects\Active Projects\23-002 LUSD Central Kitchen Improvements\23-002 LUSD Central Kitchen Improvements_Draft_23-03-17.pln

EXPANSION TANK

UNIT NO.	MANUFACTURER & MODEL NO.	DESCRIPTION	SERVICE	LOCATION	OVERALL DIMENSIONS (DXH)	OPERATING WEIGHT (LBS)	REMARKS
ET 1	AMTROL #ST-12C-DD	EXPANSION TANK	DOMESTIC HOT WATER	MECHANICAL EQUIPMENT ROOM	12"X18"	80	FACTORY PRE CHARGE SET AT 55 PSI, MAXIMUM WORKING PRESSURE 150 PSI.

ELECTRIC WATER HEATER

UNIT NO.	MANUFACTURER & MODEL NO.	SERVICE	LOCATION	UNIT CAPACITY			OUTLET TEMP. (°F)	ELEC. DATA	INPUT KW	DIMENSIONS (DXH)	OPER. WT. (LBS)	REMARKS
				STORAGE (GALLONS)	RECOVERY GPH	DEGREE RISE °F		V/PH/HZ				
EWH 1	BRADFORD WHITE #E32-120R-3	CENTRAL KITCHEN	MECHANICAL EQUIPMENT ROOM	119	78	80	140	208/3/60	15	28-1/4" X 65"	1350	SET TO 140° F,

CIRCULATION PUMPS

UNIT NO.	MANUFACTURER & MODEL NO.	SERVICE	LOCATION	TYPE	DESIGN CAPCITY		ELEC. DATA					OPER. WT. (LBS)	REMARKS
					PUMP GPM	PUMP HEAD (FT)	MOTOR HP	WATTS	F.L.A	MOTOR RPM	V/PH/HZ		
CP 1	BELL & GOSSETT #NBF-18S	HOT WATER CIRCULATION	MECH ROOM	IN LINE	5	10	1/8	90	0.74	3000	115/1/60	10	PROVIDE AQUASTAT CONTROLLER TO ACTIVATE PUMP WHEN HOT WATER RETURN REACHES 110°F AND TO DEACTIVATE PUMP AT 120°F. LOCATE AS CLOSE AS POSSIBLE TO HOT WATER SOURCE.

GREASE INTERCEPTOR

UNIT NO.	MANUFACTURER & MODEL NUMBER	DIMENSIONS (INCHES) (L x W x H)	REMARKS
GI 1	ZURN PROCEPTOR BY GREEN TURTLE #GMC750UPC-BG WITH GREEN TURTLE SAMPLE CHAMBER	96" x 62" x 68"	PROVIDE GREASE INTERCEPTOR WITH HEAVY DUTY CAST IRON COVER #FCGH4. PROVIDE SAMPLE BOX WITH 20" ROUND HEAVY DUTY FIBERGLASS COVER. H-20 RATED, PROVIDE EXTENSIONS TO GRADE AS REQUIRED.

PLUMBING FIXTURE CONNECTION SCHEDULE

MARK	DESCRIPTION	SERVICE	LOCATION	MINIMUM PIPE CONNECTIONS (INCHES)				MANUFACTURER/ MODEL NUMBER
				CW	HW	WASTE	VENT	
FS-1	FLOOR SINK	CENTRAL KITCHEN	SEE FLOOR PLANS	-	-	2"	2"	ZURN #Z1901, PROVIDE WITH A 2" NO HUB CONNECTION. 12"X12"X8" FLOOR SINK PROVIDE WITH DOME STRAINER.

KITCHEN FIXTURE CONNECTION SCHEDULE

MARK	DESCRIPTION	MINIMUM PIPE CONNECTION (INCHES)							MANUFACTURER / MODEL NUMBER
		CW	HW	INDIRECT WASTE	WASTE	VENT	GAS SIZE	MBTUH	
1	HAND SINK	1/2"	1/2"	-	1-1/2"	-	-	-	REFER TO FOOD SERVICE DRAWINGS. INDIRECT WASTE INTO (E)FS, SEE FLOOR PLANS.
2	3 COMPARTMENT SINK	-	-	-	2"	-	-	-	INDIRECT WASTE. REFER TO FOOD SERVICE DRAWINGS.
3	DOUBLE OVEN, NEW	-	--	--	-	-	-	120	REFER TO FOOD SERVICE DRAWINGS.
4	DOUBLE OVEN, RELOCATED	-	--	--	--	--	--	120	REFER TO FOOD SERVICE DRAWINGS.
5	ROTATING RACK OVEN	-	--	--	--	--	--	275	REFER TO FOOD SERVICE DRAWINGS.

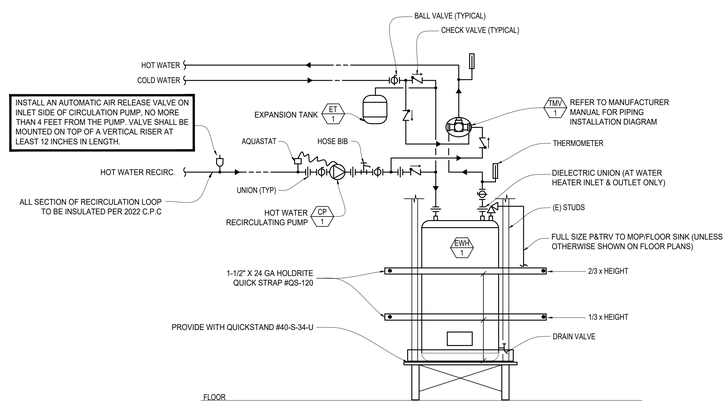

ELECTRIC WATER HEATER — SCALE NONE — 1

WATER CALCULATION

STREET WATER PRESSURE (PER CITY OF LAKESIDE 4/10/23)	105 PSI
PRESSURE LOSS THRU BACKFLOW PREVENTER	12 PSI
PRESSURE LOSS THRU WATER METER	3 PSI
TOTAL AVAILABLE WATER PRESSURE	90 PSI
PRESSURE REGULATOR SET POINT	60 PSI
ELEVATION LOSS (25 FT X 0.433) =	11 PSI
MINIMUM OPERATING PRESSURE REQUIRED AT FIXTURE	30 PSI
TOTAL AVAILABLE SYSTEM PRESSURE	19 PSI
TOTAL DEVELOPED LENGTH	221 FT
ALLOWABLE PRESSURE DROP FORMULA	
100 FT X AVAILABLE PRESSURE / LONGEST RUN OF PIPE 100 FT X 19 PSI / 221 FT	8.6 PSI
DOMESTIC WATER PIPING WILL BE SIZED BASED ON	6 PSI/100 FT

PLUMBING FIXTURE SUMMARY (ADDED)

FIXTURE	QTY.	COLD WATER		HOT WATER		SEWER	
		F.U.	TOTAL	F.U.	TOTAL	F.U.	TOTAL
1 HAND SINK	1	1.5	1.5	1.5	1.5	2.0	2.0
DOMESTIC F.U. TOTAL	-	-	1.5	-	-	-	-
KITCHEN EQUIPMENT	-	-	-	-	-	-	-
GPM CONVERSION	-	-	2.25 GPM	-	-	-	-
TOTAL BUILDING GPM			-	-			

PLUMBING EQUIPMENT SCHEDULE

MARK	EQUIPMENT	LOCATION	MANUFACTURER & MODEL NUMBER	MIN FLOW	OPR. WT. (LBS)	REMARKS
TP 1	TRAP PRIMER	SEE FLOOR PLANS	JAY R SMITH #2694	-	4.5	PRESSURE ACTIVATED TRAP PRIMER.
TM 1	THERMOSTATIC MIXING VALVE	MECH ROOM	BRADLEY CORP #S59-2025	2.0 GPM	4.5	SET TO 16 GPM WITH A 20 PSI PRESSURE DROP.

WATER HAMMER ARRESTER SCHEDULE

MARK	P.D.I. SYMBOL	MANUFACTURER AND MODEL NUMBER	FIXTURE UNIT RATING	CONNECTION SIZE	HEIGHT	WIDTH
WHA 1	A	PPP INC.	1-11	1/2"	3"	1"

CW PIPE SIZE SCHEDULE (8 FT/SEC)

PIPE SIZE	GPM (MAX)	VELOCITY	FIXTURE UNITS	
			FLUSH TANK	FLUSH VALVE
1/2"	2.5	3.5	2	--
3/4"	7	4.5	8	-
1"	15	5.5	21	-
1-1/4"	26	6.5	44	9
1-1/2"	39	7.5	83	26
2"	72	8	236	116
2-1/2"	115	8	455	329
3"	170	8	748	700

HW PIPE SIZE SCHEDULE (5 FT/SEC)

PIPE SIZE	GPM (MAX	VELOCITY FT./SEC	FIXTURE UNITS	
			FLUSH TANK	FLUSH VALVE
1/2"	2.5	3.5	2	-
3/4"	7	4.5	8	-
1"	14	5	20	-
1-1/4"	19	5	28	-
1-1/2"	27	5	46	-
2"	46	5	111	-
2-1/2"	72	5	236	-

ALPHASTUDIO DESIGN GROUP
6152 INNOVATION WAY
CARLSBAD, 92009
760-431-2444
www.alphastudio-design.com

ARCHITECT OF RECORD

ENGINEER OF RECORD

DEC ENGINEERS
10150 MEANLEY DRIVE STE 250
SAN DIEGO, CA 92131
P: 858 578.3270 F: 858 578.3273

CENTRAL KITCHEN IMPROVEMENTS

LAKESIDE UNION SCHOOL DISTRICT

12335 WOODSIDE AVE
LAKESIDE, CA 92040

LAKESIDE UNION SCHOOL DISTRICT
12335 WOODSIDE AVE LAKESIDE CA 92040

REVISIONS

MARK	DATE	DESCRIPTION

PROJECT NO: #PIn

MODEL FILE:
23-002 LUSD Central Kitchen Improvements_Draft_23-03-17.pln

PLOT DATE:
4/26/2023

SHEET TITLE

PLUMBING SCHEDULES

P601

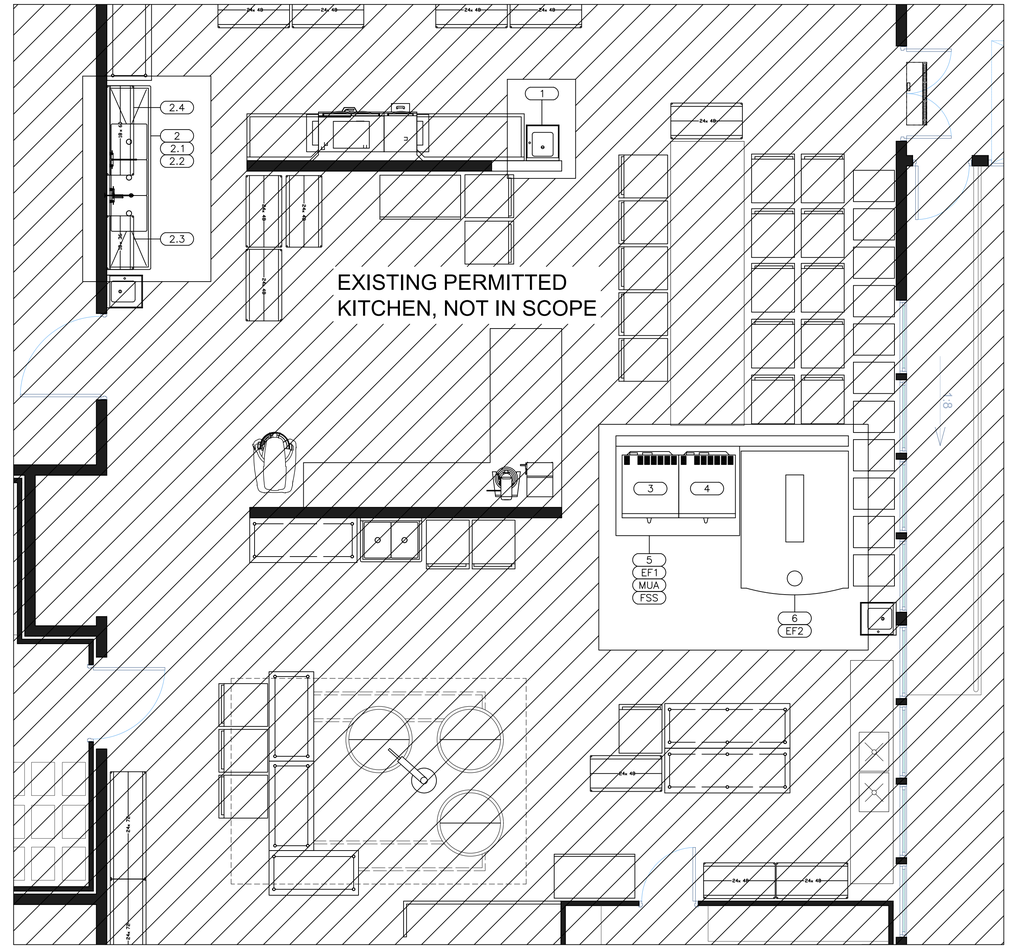

FOOD SERVICE EQUIPMENT PLAN ENLARGED VIEW

SCALE - $\frac{1}{4}$" = 1'

EQUIPMENT SCHEDULE

Item No	Qty	By	Equipment Category	Manufacturer	Model Number	Base	Volts	Amps	KW	HP	Phase	Direct	Plug	NEMA	Electrical AFF (in)	Electrical Remarks	Cold Water Size (in)	Cold Water AFF (in)	Hot Water Size (in)	Hot Water AFF (in)	Direct Drain Size (in)	Direct Drain AFF (in)	Indir Drain Size (in)	MBTUH	Gas Size (in)	Gas AFF (in)	Plumbing Remarks
1	1	KEC	Sink, Hand, Wall Mount	John Boos & Co.	PBHS-ADA-P-STD-SSLR	Wall											0.5	21	0.5	21			1.5				
2	1	KEC	3 Compartment Utensil Sink	John Boos & Co.	3PB244-2D24	Legs																	2.0				
2.1	1	KEC	Faucet, Backsplash Mount	Fisher	13218	Item 2											0.5	15	0.5	15							
2.2	1	KEC	Pre-Rinse Faucet, Backsplash Mount	Fisher	34487	Item 2											0.5	15	0.5	15							
2.3	1	KEC	Wall-Mounted Wire Drying Rack	Olympic	J1860K	Wall																					
2.4	1	KEC	Wall-Mounted Wire Drying Rack	Olympic	J1836K	Wall																					
3	1	KEC	Double Oven, Convection, Gas	Garland	MCO-GD-20M	Casters	120	9.8			1		X	5-15P	30									120	1	60	SOV by PC
			Item 3 Continued				120	9.8			1		X	5-15P	60												
4	1	OW	Double Oven, Convection, Gas	Lang	Selectronic	Casters	120	13.0			1		X	5-15P	30	BY OWNER, VERIFY								60	0.75	30	BY OWNER, VERIFY
			Item 4 Continued				120	13.0			1		X	5-15P	60	BY OWNER, VERIFY								60	0.75	60	BY OWNER, VERIFY
5	1	KEC	18 Ga. S/S Type 1 Exhaust Hood	Accurex	XXEW-84-S	Ceiling	115	15.0			1	X			60	For Lights & Controls											
6	1	KEC	Oven, Rotating Rack, Gas	Baxter Manufacturing	OV500G2-EE	Floor	120	15.0	1.8		1	X			108		0.5	108					0.5	275	1.25	108	SOV by PC
EF1	1	KEC	Hood Exhaust Fan	Accurex	XUEF-16	Roof	208	4.6		1.0	3	X			Roof												
EF2	1	KEC	Power Ventilator for Item 6	Accurex	XCUE-100-VG	Roof	115	5.8		0.25	1	X			Roof												
FSS1	1	KEC	Fire Suppression System	Ansul		Wall	120	1.0			1	X			108												
MUA	1	KEC	Make Up Air Fan	Accurex	XKID-15-M2	Roof	208	3.4		3.0	3	X			Roof												

ECONOMY
RESTAURANT EQUIPMENT & SUPPLY CO.
Suppliers, Designers, and Consultants to the Foodservice Industry
WWW.ECONOMYRESTAURANTEQUIP.COM
A Proud NEFA Partner

1111 GRAND AVE.
SAN MARCOS, CA 92078
P.760 471 2761

LAKESIDE UNION SCHOOL DISTRICT

CENTRAL KITCHEN MODERNIZATION
12335 WOODSIDE AVE.
LAKESIDE, CA 92040

EQUIPMENT LAYOUT

DATE	REMARKS
5/12/23	SUBMITTAL 1

DRAWN BY - JTO

K1.0

22201_LAKESIDEUSD.DWG

PLUMBING SYMBOLS

- HOT WATER
- COLD WATER
- DIRECT WASTE
- GAS
- FLOOR DRAIN
- FLOOR SINK

PLUMBING NOTES

1. UTILITY CONNECTIONS SHOWN ON THESE PLANS ARE FOR FOODSERVICE EQUIPMENT ONLY. REFER TO OWNER, ARCHITECT AND OR GENERAL CONTRACTOR FOR FURTHER REQUIREMENTS.
2. PLUMBING CONTRACTOR SHALL REFER TO SANITATION NOTES AND ALL OTHER NOTES ON THESE DRAWINGS AND IS RESPONSIBLE TO PERFORM HIS WORK IN ACCORD WITH ALL GOVERNING CODES & REGULATIONS.
3. PLUMBING CONTRACTOR TO FURNISH & INSTALL ALL INDIRECT WASTE LINES INCLUDING CONDENSATE LINES FROM REFRIGERATION EQUIPMENT, ICE MACHINES, ICE BINS, WALK-INS,ETC..
4. PLUMBING CONTACTOR MUST OBTAIN ALL NECESSARY PERMITS FOR HIS WORK.
5. PLUMBING CONTRACTOR TO MAKE ALL ROUGH-INS & FINAL CONNECTIONS AND TO FURNISH & INSTALL ALL PIPING, TEES, ELBOWS, TRAPS, SHUT OFF VALVES, REGULATORS, FILTERS, ETC. AS REQUIRED TO MAKE A COMPLETE INSTALLATION.
6. ROUGH IN DIMENSIONS SHOWN ON THIS PLAN ARE FROM FACE OF FINISH WALL TO CENTER LINE OF OUTLET AND HEIGHTS ARE ABOVE FINISH FLOOR TO CENTER LINE OF OUTLET.
7. PLUMBING CONTRACTOR MUST SEAL [WATER TIGHT AND VERMIM PROOF] ALL WALL, CEILING AND FLOOR PENETRATIONS RESULTING FROM HIS WORK.
8. PLUMBING CONTRACTOR TO FURNISH & INSTALL SHUT OFF VALVES ON ALL GAS AND WATER LINES SO AS TO BE EASILY ACCESSIBLE.
9. PLUMBING CONTRACTOR TO INSULATE ALL CONDENSATE DRAINS AND FROM ICE BINS & MACHINES IN ORDER TO PREVENT CONDENSATION BUILD UP ON THESE LINES.
10. PLUMBING CONTRACTOR TO INSTALL GAS SHUT OFF VALVES PROVIDED BY THE FIRE EQUIPMENT CONTRACTOR.
11. PLUMBING CONTRACTOR TO FURNISH & INSTALL PRESSURE REGULATORS AT WARE WASHING MACHINES AND GAS EQUIPMENT AS REQUIRED.
12. PLUMBING CONTRACTOR TO FURNISH & INSTALL SHUT OFF VALVES ON STEAM TABLES, SALAD BAR AND ICE PAN DRAINS AS REQUIRED.
13. PLUMBING CONTRACTOR TO FURNISH & INSTALL ROUGH-INS AND FINAL CONNECTIONS FOR MAKE UP AIR UNITS INCLUDING DRAIN LINE TO ROOF DRAIN.
14. FLOOR TO BE SLOPED 1/4" PER 24" RADIUS TO FLOOR DRAINS
15. WATER SUPPLY TO CARBONATORS SHALL BE PROTECTED BY AN APPROVED REDUCED PRESSURE PRINCIPLE BACKFLOW PREVENTER. THE RELIEF VALVE SHALL DRAIN INDIRECTLY TO SEWER VIA LEGAL AIR GAP.

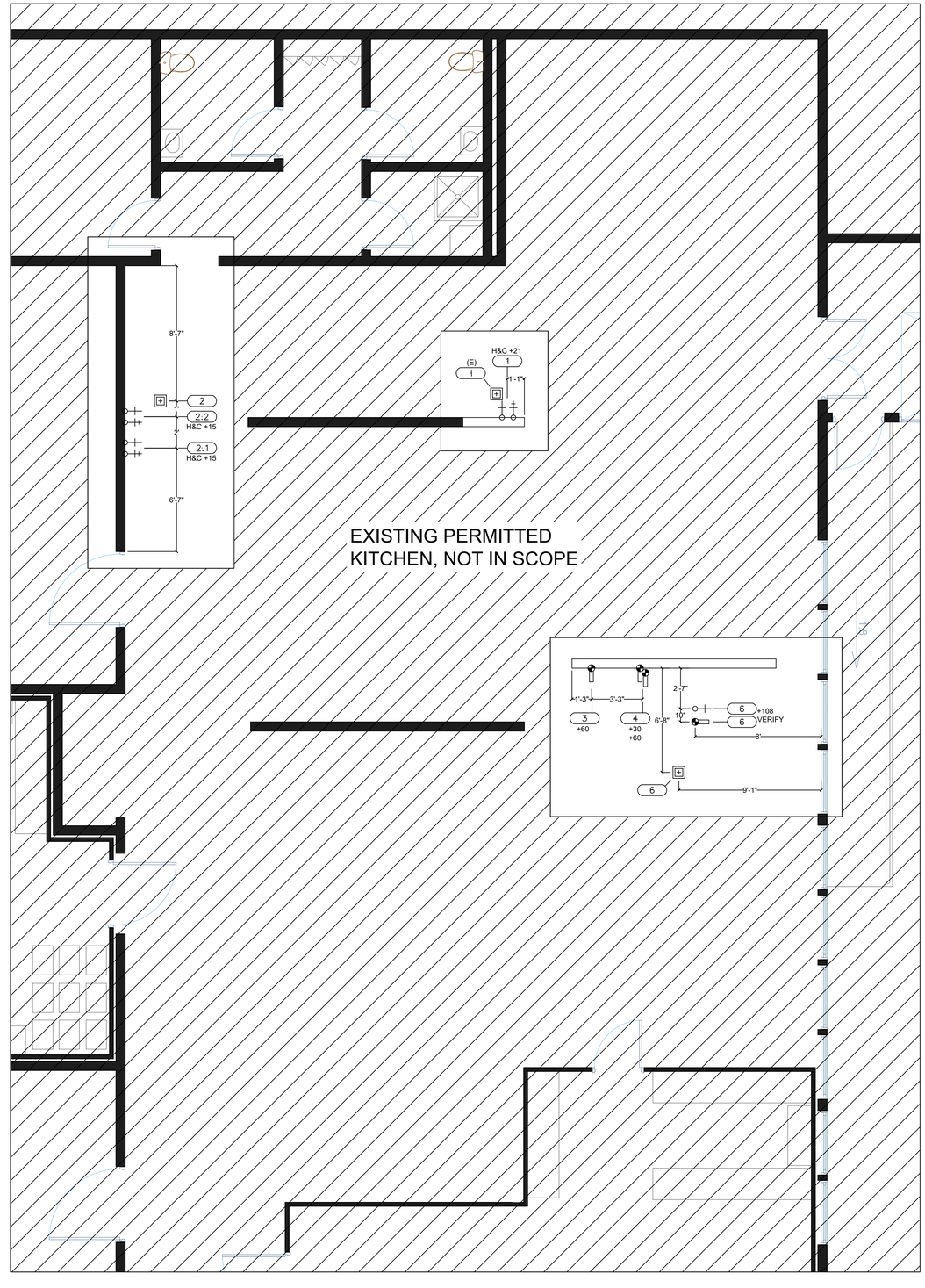

PLUMBING ROUGH-IN PLAN

SCALE - $\frac{1}{4}$ " = 1'

ECONOMY
RESTAURANT EQUIPMENT & SUPPLY CO.
Suppliers, Designers, and Consultants to the Foodservice Industry
WWW.ECONOMYRESTAURANTEQUIP.COM
A Proud NEFA Partner

1111 GRAND AVE.
SAN MARCOS, CA 92078
P.760 471 2761

LAKESIDE UNION SCHOOL DISTRICT

CENTRAL KITCHEN MODERNIZATION
12335 WOODSIDE AVE.
LAKESIDE, CA 92040

PLUMBING
ROUGH-N
PLAN

DATE	REMARKS
5/12/23	SUBMITTAL 1

DRAWN BY - JTO

K2.0

22201_LAKESIDEUSD.DWG

ELECTRICAL SYMBOLS

- 120 V DUPLEX RECEPTACLE
- 280/240 V RECEPTACLE
- JUNCTION BOX
- LIGHT FIXTURE
- FIRE PULL BOX
- SWITCH

ELECTRICAL NOTES

1. UTILITY CONNECTIONS SHOWN ON THESE PLANS ARE FOR FOODSERVICE EQUIPMENT ONLY. REFER TO OWNER, ARCHITECT AND OR GENERAL CONTACTOR FOR FURTHER REQUIREMENTS.
2. ELECTRICAL CONTRACTOR SHALL REFER TO SANITATION NOTES AND ALL OTHER NOTES ON THE DRAWINGS AND IS RESPONSIBLE TO PERFORM HIS WORK IN ACCORD WITH ALL GOVERNING CODES & REGULATIONS.
3. ELECTRICAL CONTRACTOR MUST OBTAIN ALL NECESSARY PERMITS FOR HIS WORK.
4. ELECTRICAL CONTRACTOR TO MAKE ALL ROUGH-INS AND FINAL CONNECTIONS AND TO FURNISH & INSTALL CONDUIT, WIRE, BREAKERS, SWITCHES, ETC. AS REQUIRED TO MAKE A COMPLETE INSTALLTION.
5. ROUGH IN DIMENSIONS SHOWN ON THIS PLAN ARE FROM FACE OF FINISH WALL TO CENTER OF OUTLET AND HEIGHTS ARE ABOVE FINISH FLOOR TO CENTER LINE OF OUTLET.
6. ELECTRICAL CONTRACTOR TO FURNISH & INSTALL WIRE & CONDUIT AS REQUIRED FOR CONTROL CIRCUITS ON WALK-IN FREEZERS.
7. ELECTRICAL CONTRACTOR TO FURNISH & INSTALL ALL WIRE & CONDUIT AS REQUIRED FOR THE FIRE SUPRESSION SYSTEM FUEL SHUT OFF VALVE, ALARM SYSTEM TIE INS AND ALSO TO PROVIDE SHUNT TRIP BREAKERS AS REQUIRED TO SHUT DOWN ELECTRICAL EQUIPMENT UNDER THE EXHAUST HOOD.
8. ELECTRICAL CONTRACTOR TO FURNISH & INSTALL ALL JUNCTION BOXES, OUTLET BOXES & PULL BOXES AS REQUIRED BY THESE PLANS.
9. ELECTRICAL CONTRACTOR TO VERIFY INCOMING SERVICE AND NOTIFY ECONOMY OF ANY DISCREPACIES BETWEEN THESE PLANS AND FIELD CONDITIONS OR LOCAL CODE REQUIREMENTS.
10. ELECTRICAL CONTRACTOR TO EXTEND CONDUIT STUB OUTS 6'-0" FOR FINAL CONNECTION UNLESS OTHERWISE SPECIFIED.
11. ELECTRICAL CONTRACTOR MUST SEAL [WATER TIGHT & VERMIN PROOF] ALL WALL, CEILING AND FLOOR PENETRATIONS RESULTING FROM HIS WORK.
12. ELECTRICAL CONTRACTOR TO FURNISH & INSTALL STAINLESS STEEL COVER PLATES IN FOODSERVICE AREAS.
13. ELECTRICAL CONTRACTOR TO SHORTEN OR LENGTHEN AND FURNISH POWER CORDS AS REQUIRED.
14. ELECTRICAL CONTRACTOR TO FURNISH & INSTALL WATER TIGHT FLEX CONDUIT IN ALL WET AREAS.
15. ELECTRICAL CONTRACTOR TO FURNISH & INSTALL WIRE & CONDUIT FOR LIGHTS, SWITCHES, RELIEF PORT HEATERS, DOOR HEATERS AND TO INSTALL LIGHTS PROVIDED BY THE EXHAUST HOOD OR WALK-IN MANUFACTURERS.
16. ELECTRICAL CONTRACTOR TO FURNISH & INSTALL CONDUIT FOR BEVERAGE OR REFRIGERATION LINES AS REQUIRED.
17. ELECTRICAL CONTRACTOR TO FURNISH & INSTALL ROUGH-INS & FINAL CONNECTIONS TO ALL EXHUAST, MAKE UP AIR AND REFRIGERATION SYSTEMS ON ROOF COMPLETE WITH ALL DISCONNECTS AS REQUIRED BY CODE.
18. ELECTRICAL CONTRACTOR TO SEAL ALL CONDUITS ENTERING OR LEAVING THE WALK-IN COOLER OR FREEZER

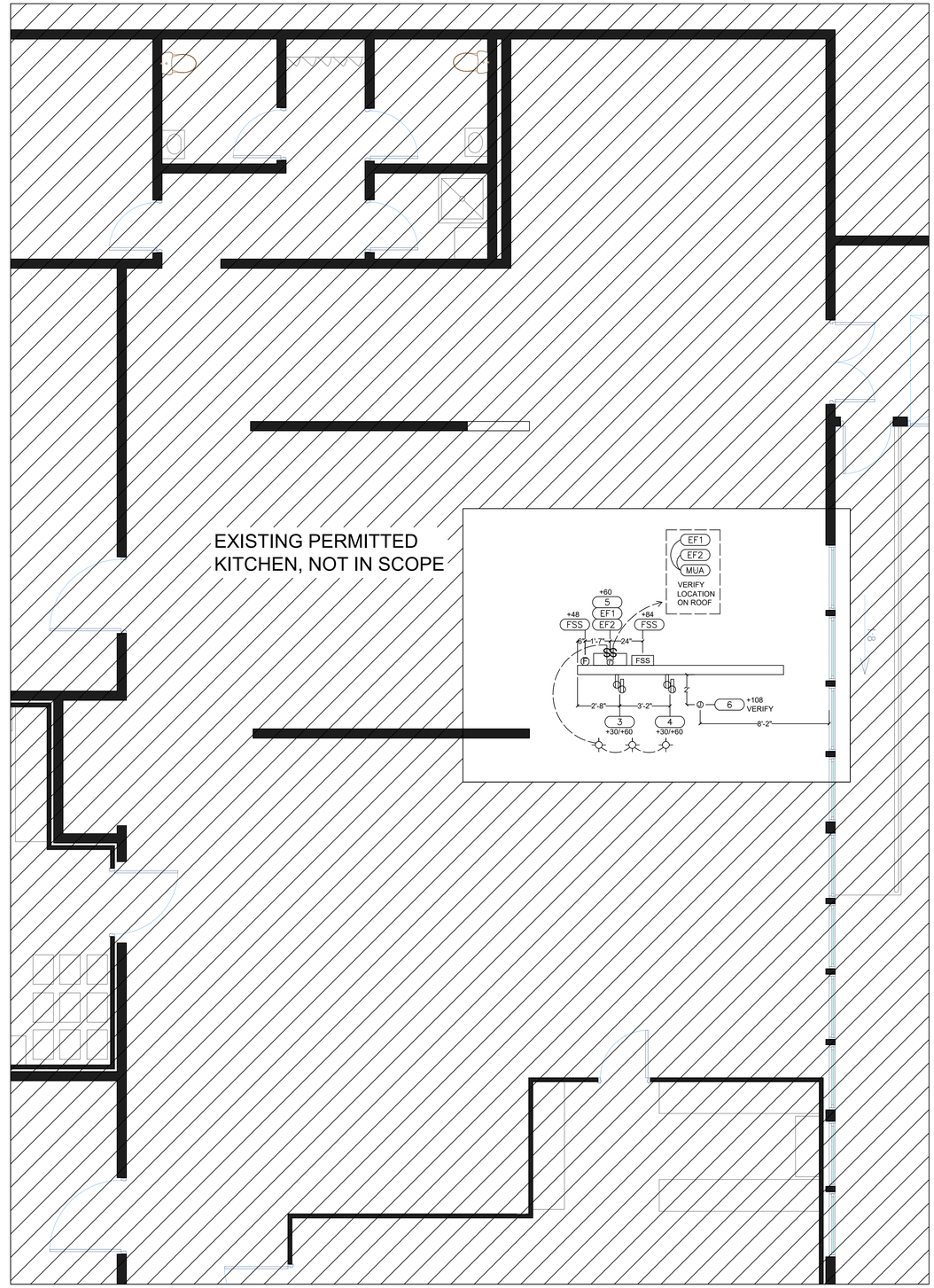

ELECTRICAL ROUGH-IN PLAN

SCALE - $\frac{1}{4}$ " = 1'

ECONOMY
RESTAURANT EQUIPMENT & SUPPLY CO.
Suppliers, Designers, and Consultants to the Foodservice Industry
WWW.ECONOMYRESTAURANTEQUIP.COM
A Proud NEFA Partner

1111 GRAND AVE.
SAN MARCOS, CA 92078
P.760 471 2761

LAKESIDE UNION SCHOOL DISTRICT

CENTRAL KITCHEN MODERNIZATION
12335 WOODSIDE AVE.
LAKESIDE, CA 92040

ELECTRICAL ROUGH-N PLAN

DATE	REMARKS
5/12/23	SUBMITTAL 1

DRAWN BY - JTO

K2.1

22201_LAKESIDEUSD.DWG

HOOD INFORMATION

HOOD NO.	MARK	MODEL	HOOD DIMENSIONS (IN.)			HOOD CONSTR.	COOKING LOAD / DUTY RATING	EXHAUST						SUPPLY		TOTAL WEIGHT LBS.	SECTION LOCATION
			LENGTH	WIDTH	HEIGHT			TOTAL CFM	COLLAR(S)					MUA CFM	AC CFM		
									WIDTH	LENGTH	DIA.	CFM	S.P.				
1	HOOD1 - TYPE I	XXEW-84-S	84	60	24	300 SS 100%	HEAVY	1600	10	14		1600	0.672	1280		257.226	SINGLE

HOOD INFORMATION

HOOD NO.	MARK	LIGHTING DETAILS			GREASE FILTRATION DETAILS				UTILITY CABINET(S)				
		FIXTURE TYPE BULB / LAMP INFO	QTY	FOOT CANDLES	TYPE / MODEL MATERIAL	QTY	SIZE (IN.)		LOCATION	FIRE SYSTEM		CONTROLS	
							L	H		TYPE	SIZE	MODEL	INTERFACE
1	HOOD1 - TYPE I	ROUND LED	2	67.26	X-TRACTOR STAINLESS STEEL	4	16	20					
						1	20						

SUPPLY PLENUM INFORMATION

HOOD NO.	MARK	POS.	TYPE	SIZE (IN.)			INSULATED	DAMPER(S)	LED LIGHT(S)		TOTAL CFM	TOTAL S.P.	COLLARS							
				L	W	H			SUPPLIED	QTY			TYPE	MOUNTING	QTY	W	L	DIA.	CFM	VEL.
1	HOOD1 - TYPE I	FRONT	ASP	85	14	4	NO	YES	NO		1280	0.01	MUA	FACTORY	2	12	30		640	256

HOOD OPTIONS

- UL 710 LISTED W/ OUT EXHAUST FIRE DAMPER - UL #R25625
- BACK INTEGRAL AIR SPACE - 3 IN WIDE
- RIGHT NON-INTEGRAL AIR SPACE - 1 IN THICK - ZERO CLEARANCE
- FACTORY MOUNTED EXHAUST COLLAR(S)
- PERFORMANCE ENHANCING LIP (PEL) TECHNOLOGY
- STANDING SEAM CONSTRUCTION FOR SUPERIOR STRENGTH

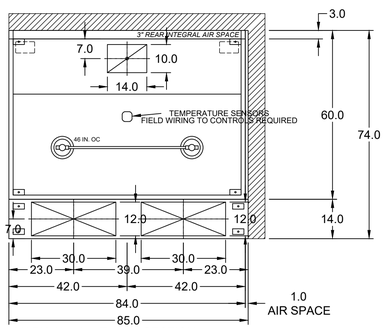

MARK: Hood1 - Type I - SECTION 1
PLAN VIEW

FIRE SYSTEM MARK: Fire Suppression System
PIPE & CONDUIT
BY ANSUL DISTRIBUTOR

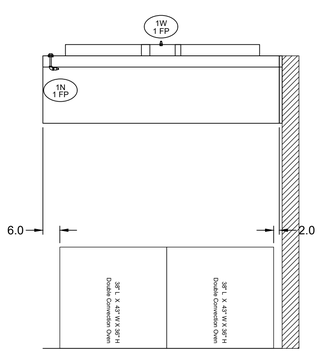

MARK: Hood1 - Type I - SECTION 1
ELEVATION VIEW

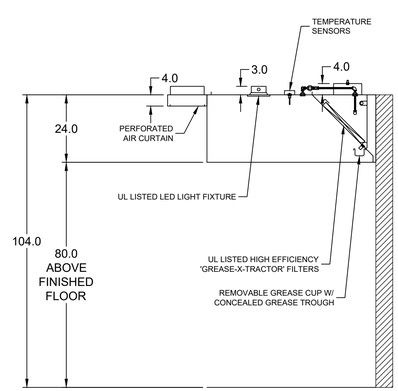

MARK: Hood1 - Type I
SECTION VIEW

ZERO CLEARANCE TO END OF HOOD

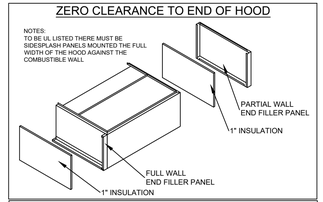

HOOD HANGING HEIGHT FOR FIRE SYSTEMS

VERIFICATION OF HOOD HANGING HEIGHT ABOVE FINISHED FLOOR (A.F.F.) IS REQUIRED FOR CORRECT PLACEMENT OF FIRE SYSTEM NOZZLES.

☐ RECOMMENDED HANGING HEIGHT = 80" FROM FINISHED FLOOR TO LOWER FRONT EDGE OF HOOD.

☐ OTHER HANGING HEIGHT = _____" FROM FINISHED FLOOR TO LOWER EDGE OF HOOD.

SUPPLY PLENUM HANGER BRACKET DETAIL

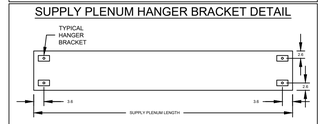

HOOD HANGER BRACKET DETAIL

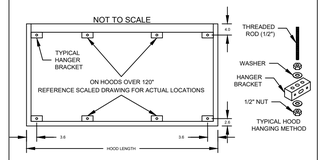

ROUND LED LIGHT DETAIL

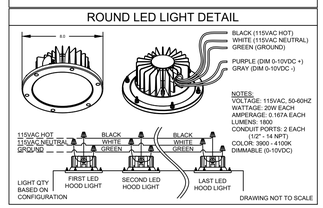

LAKESIDE USD CENTRAL KITCHEN REV2

HOOD1 - TYPE I

PROJECT 4/28/2023

MARK

ACCUREX SOUTHERN CA & HAWAII
JONATHAN CABRERA
JONATHAN.CABRERA@ACCUREX.COM
(509)430-5326

ACCUREX

ECONOMY
RESTAURANT EQUIPMENT & SUPPLY CO.
Suppliers, Designers, and Consultants to the Foodservice Industry
WWW.ECONOMYRESTAURANTEQUIP.COM
A Proud NEFA Partner
1111 GRAND AVE.
SAN MARCOS, CA 92078
P.760 471 2761

LAKESIDE UNION SCHOOL DISTRICT

CENTRAL KITCHEN MODERNIZATION
12335 WOODSIDE AVE.
LAKESIDE, CA 92040

EXHAUST SYSTEM DETAILS

DATE	REMARKS
5/12/23	SUBMITTAL 1

DRAWN BY - JTO

K3.0

22201_LAKESIDEUSD.DWG

Direct Drive Upblast Centrifugal Roof Exhaust Fan

MARK INFORMATION		FAN INFORMATION						MOTOR INFORMATION					
QTY	MARK	MODEL	VOLUME (CFM)	TOTAL EXTERNAL SP (IN WG)	FAN RPM	OPERATING POWER (HP)	WEIGHT (LB.)	SIZE (HP)	V/C/P	ENCLOSURE	MOTOR RPM	WINDINGS	NEC FLA*
1	KEF-1	XCUE-140-A	1,600	1.5	1,613	0.73	96	1	208/60/3	OP	1725	1	4.6

*NEC FLA - Based on table 430.250 or 430.248 of National Electrical Code 2020. Actual motor FLA may vary for sizing thermal overload, consult factory"

KEF-1 : SELECTED OPTIONS AND ACCESSORIES
Motor VFD Rated without Shaft Grounding Protection
One piece fully welded windband
Tapered bushing wheel hub
Breather tube outlet area min. 4.4 sq. in. (sizes 99-480), 2.0 sq. in. (sizes 60-95)
Min. windband material thickness: 0.051" aluminum (060-240), 0.064" aluminum (240HP, 240XP), 0.080" aluminum (sizes 300-480)
Larger Curb Cap Size - 26 Square
UL/cUL 705 Listed - Supplement SC - "Power Ventilators for Restaurant Exh. Appliances" (Formerly UL 762)
Switch, NEMA-3R, Toggle, Shipped with Unit
Hinge, Factory Installed
High Temp Curb Seal Rated for Continuous Duty at 1500 F (Factory Attached)
Grease Trap (PN 475538)

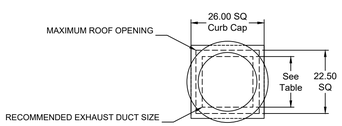

DUCT TYPE	SIZE
STANDARD	18 SQ
FIRE-WRAPPED	12 SQ

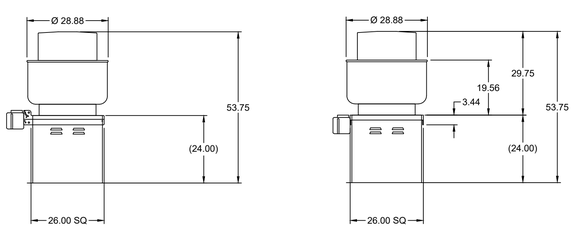

DUCT DIMENSIONS ARE LARGEST POSSIBLE DUCT TO FIT THROUGH CURB.
CONSULT SYSTEM DESIGN ENGINEER FOR RECOMMENDED DUCT SIZE.

OVERALL HEIGHT MAY BE GREATER DEPENDING ON
MOTOR, ADAPTER, AND/OR HINGE BASE.

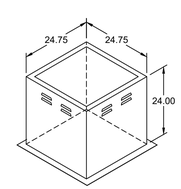

PROJECT
4/28/2023

LAKESIDE USD CENTRAL KITCHEN REV2

MARK

KEF-1

ACCUREX SOUTHERN CA & HAWAII
JONATHAN CABRERA
JONATHAN.CABRERA@ACCUREX.COM
(509)430-5326

ACCUREX

ECONOMY
RESTAURANT EQUIPMENT & SUPPLY CO.
Suppliers, Designers, and Consultants to the Foodservice Industry
WWW.ECONOMYRESTAURANTEQUIP.COM
A Proud NEFA Partner

1111 GRAND AVE.
SAN MARCOS, CA 92078
P.760 471 2761

LAKESIDE UNION SCHOOL DISTRICT

CENTRAL KITCHEN MODERNIZATION
12335 WOODSIDE AVE.
LAKESIDE, CA 92040

EXHAUST SYSTEM DETAILS

DATE	REMARKS
5/12/23	SUBMITTAL 1

DRAWN BY - JTO

K3.1

22201_LAKESIDEUSD.DWG

Direct Drive Upblast Centrifugal Roof Exhaust Fan

MARK INFORMATION		FAN INFORMATION						MOTOR INFORMATION					
QTY	MARK	MODEL	VOLUME (CFM)	TOTAL EXTERNAL SP (IN WG)	FAN RPM	OPERATING POWER (HP)	WEIGHT (LB.)	SIZE (HP)	V/C/P	ENCLOSURE	MOTOR RPM	WINDINGS	NEC FLA*
1	KEF-2 (Eyebrow Hood)	XCUE-100-VG	1,000	0.8	1,644	0.25	63	0.25	115/60/1	TN	1725	1	5.8

*NEC FLA - Based on table 430.250 or 430.248 of National Electrical Code 2020. Actual motor FLA may vary for sizing thermal overload, consult factory"

KEF-2 (Eyebrow Hood) : SELECTED OPTIONS AND ACCESSORIES
One piece fully welded windband
Tapered bushing wheel hub
Breather tube outlet area min. 4.4 sq. in. (sizes 99-480), 2.0 sq. in. (sizes 60-95)
Min. windband material thickness: 0.051" aluminum (060-240), 0.064" aluminum (240HP, 240XP), 0.080" aluminum (sizes 300-480)
Larger Curb Cap Size - 22 Square
UL/cUL 705 Listed - Supplement SC - "Power Ventilators for Restaurant Exh. Appliances" (Formerly UL 762)
Switch, NEMA-3R, Toggle, Shipped with Unit
Hinge, Factory Installed
High Temp Curb Seal Rated for Continuous Duty at 1500 F (Factory Attached)
Grease Trap (PN 475538)

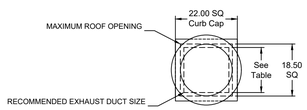

DUCT TYPE	SIZE
STANDARD	16 SQ
FIRE-WRAPPED	8 SQ

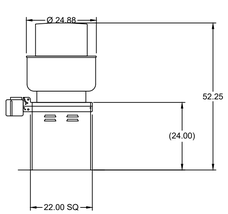

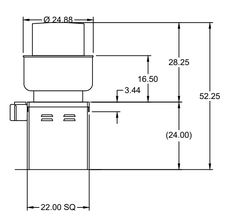

DUCT DIMENSIONS ARE LARGEST POSSIBLE DUCT TO FIT THROUGH CURB.
CONSULT SYSTEM DESIGN ENGINEER FOR RECOMMENDED DUCT SIZE.

OVERALL HEIGHT MAY BE GREATER DEPENDING ON
MOTOR, ADAPTER, AND/OR HINGE BASE.

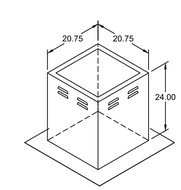

PROJECT
4/28/2023

LAKESIDE USD CENTRAL KITCHEN REV2

MARK

KEF-2 (EYEBROW HOOD)

ACCUREX SOUTHERN CA & HAWAII
JONATHAN CABRERA
JONATHAN.CABRERA@ACCUREX.COM
(509)430-5326

ACCUREX

ECONOMY
RESTAURANT EQUIPMENT & SUPPLY CO.
Suppliers, Designers, and Consultants to the Foodservice Industry
WWW.ECONOMYRESTAURANTEQUIP.COM
A Proud NEFA Partner

1111 GRAND AVE.
SAN MARCOS, CA 92078
P.760 471 2761

LAKESIDE UNION SCHOOL DISTRICT

CENTRAL KITCHEN MODERNIZATION
12335 WOODSIDE AVE.
LAKESIDE, CA 92040

EXHAUST SYSTEM DETAILS

DATE	REMARKS
5/12/23	SUBMITTAL 1

DRAWN BY - JTO

K3.2

22201_LAKESIDEUSD.DWG

Direct Drive Mixed Flow Filtered Roof Supply Fan

MARK INFORMATION		FAN INFORMATION						MOTOR INFORMATION				
QTY	MARK	MODEL	VOLUME (CFM)	TOTAL EXTERNAL SP (IN WG)	FAN RPM	OPERATING POWER (HP)	WEIGHT (LB.)	SIZE (HP)	V/C/P	ENCLOSURE	MOTOR RPM	WINDINGS
1	MUA-1	XKID-15-M2	2,080	0.769	1,365	0.61	191	1	208/60/3	TF	1160	1

MUA-1 : SELECTED OPTIONS AND ACCESSORIES
Bottom Weatherhood Intake, Bottom (Curb Mounted) Discharge
UL/cUL 705 Listed - "Power Ventilators"
Switch, NEMA-3R, Toggle, Shipped Separate
Damper Shipped Loose, WD-330-PB-18.25X18.25, Gravity Operated, Not Coated
1" Aluminum Primary Filter, 2" MERV 13 Secondary Filter

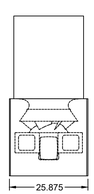

TOP VIEW

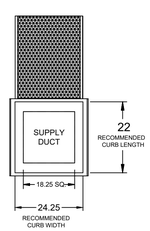

BOTTOM VIEW

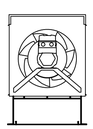

END VIEW

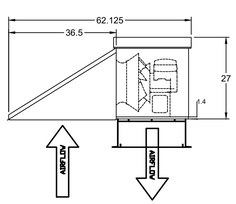

SIDE VIEW

NOT DRAWN TO SCALE

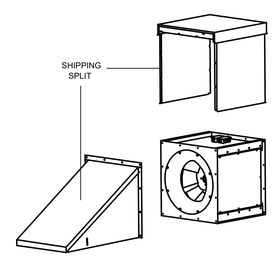

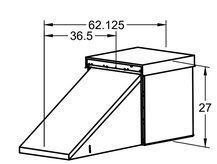

ACCUREX

ACCUREX SOUTHERN CA & HAWAII
JONATHAN CABRERA
JONATHAN.CABRERA@ACCUREX.COM
(509)430-5326

PROJECT 4/28/2023

LAKESIDE USD CENTRAL KITCHEN REV2

MARK

MUA-1

ECONOMY
RESTAURANT EQUIPMENT & SUPPLY CO.
Suppliers, Designers, and Consultants to the Foodservice Industry
WWW.ECONOMYRESTAURANTEQUIP.COM
A Proud NEFA Partner

1111 GRAND AVE.
SAN MARCOS, CA 92078
P.760 471 2761

LAKESIDE UNION SCHOOL DISTRICT

CENTRAL KITCHEN MODERNIZATION
12335 WOODSIDE AVE.
LAKESIDE, CA 92040

EXHAUST SYSTEM DETAILS

DATE	REMARKS
5/12/23	SUBMITTAL 1

DRAWN BY - JTO

K3.3

22201_LAKESIDEUSD.DWG

CONTROL INFORMATION

MARK	ELECTRICAL CONTROL PACKAGE		USER INTERFACE	
	MODEL	LOCATION	TYPE	LOCATION
CONTROL SYSTEM	XKC-CV-SB-21-2-1-0	SHIP LOOSE ENCLOSURE	FULL COLOR TOUCHSCREEN	SHIP LOOSE

FANS CONTROLLED

FAN #	TYPE	FAN	FAN MARK	ZONE	CFM	MOTOR HP	MOTOR VOLT	CYCLE	MOTOR PHASE	MOTOR STARTER IN PANEL	VFD IN PANEL
1	EXHAUST	E1	KEF-1	1	1600	1	208	56	3	NO	YES
2	EXHAUST	E2	KEF-2 (EYEBROW HOOD)	1	1000	0.25	115	60	1	NO	NO
3	SUPPLY	S1	MUA-1	1	2080	1	208	71	3	NO	YES

CONTROL FEATURES

- HOOD LIGHT CONTROL
- TEMP SENSORS (FACTORY INSTALLED) - QTY. 1
- TEMP SENSORS (SHIPPED LOOSE) - QTY. 1
- DRY FIRE CONTACTS - QTY. 2
- LIGHTS OFF DURING FIRE
- EXHAUST MAX DURING FIRE
- SUPPLY OFF DURING FIRE
- BMS INTEGRATION - BACNET MSTP
- GAS RESET
- VFD(S) IN CONTROL PANEL PROVIDED FOR BALANCING

ACCUREX

DOC NUMBER: #### REV: ####

CAUTION
UNIT MUST BE GROUNDED IN ACCORDANCE WITH N.E.C. POWER MUST BE OFF WHILE SERVICING.

ATTENTION
L'APPAREIL DOIT ÊTRE MIS À LA TERRE CONFORMÉMENT AU CODE C.E. L'ALIMENTATION DOIT ÊTRE COUPÉE DURANT L'ENTRETIEN.

c UL us LISTED 43BM

COMMERCIAL APPLIANCE OUTLET CENTER
ELECTRICAL RATINGS: 110-240V, 1PHASE, 50-60HZ,15A
BASE FILE #E200616, ML FILE #E313951

THESE DRAWINGS SHALL NOT BE REMOVED FROM THIS EQUIPMENT. USE COPPER CONDUCTORS RATED TO 90°C UNLESS SPECIFIED. TORQUE CONTROL & GROUND BLOCKS TO 8 LBS. IN. TORQUE POWER LUGS/SCREWS TO COMPONENT RATINGS LISTED. TORQUE CONTROL BOARD SCREW TERMINALS TO 3.5 LBS. IN. FIELD CONTROL WIRING RESISTANCE SHOULD NOT EXCEED 0.75 OHM. SEE IOM FOR ADDITIONAL INFORMATION, OR CALL FACTORY AT 1-800-371-6858.
PRG VERSION: V4
FIELD WIRED (CÂBLÉ LOCALEMENT) - - - - - -
FACTORY WIRED (CÂBLÉ À L'USINE) ———

NE PAS RETIRER CES DESSINS DE CET ÉQUIPEMENT. SAUF INDICATION CONTRAIRE, UTILISER DES CONDUCTEURS EN CUIVRE CLASSÉS 90 °C. SERRER LES BORNES DE COMMANDE ET DE MISE À LA TERRE À 8 LB-PO. SERRER LES COSSES/VIS D'ALIMENTATION AUX COUPLES INDIQUÉS POUR LE COMPOSANT. SERRER LES BORNES À VIS DE LA CARTE DE COMMANDE À 3.5 LB-PO. LA RÉSISTANCE DU CÂBLAGE DE COMMANDE LOCAL NE DOIT PAS DÉPASSER 0.75 OHM. POUR PLUS D'INFORMATION, CONSULTER LE MANUEL OU APPELER 1-800-371-6858

WIRING DIAGRAM CODE: ####
JOB NAME: LAKESIDE USD CENTRAL KITCHEN REV2
MODEL: XKC-CV-SB-21-2-1-0
SERIAL NUMBER: WDSN#
MARK: CONTROL SYSTEM

POWER WIRING FOR KITCHEN CONTROLS
(WIRING TO BE DONE BY ELECTRICIAN)

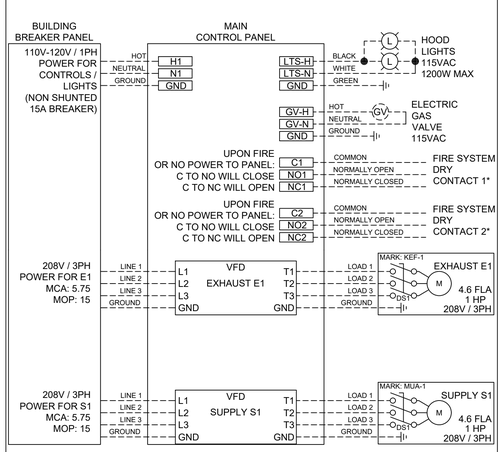

POWER WIRING FROM BREAKER PANEL DIRECT TO FANS
(WIRING TO BE DONE BY ELECTRICIAN)

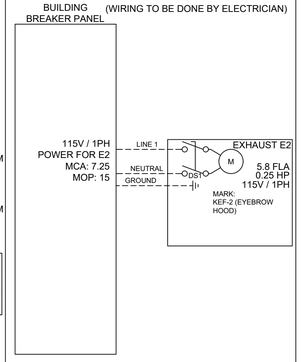

CONTROL WIRING FOR KITCHEN CONTROLS
(WIRING TO BE DONE BY ELECTRICIAN, IF NO CONTROLS CONTRACTOR. USE 18-22GA WIRE UNLESS SPECIFIED.)

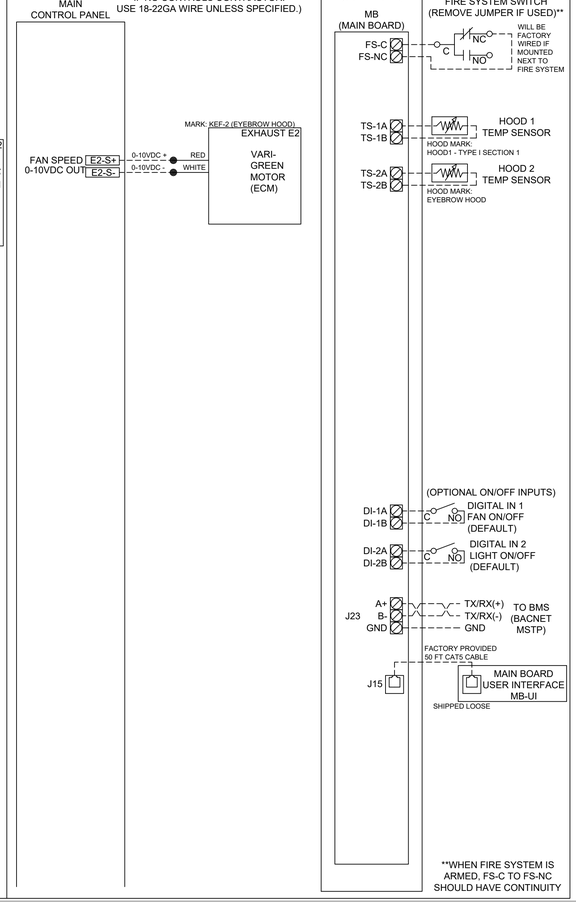

**WHEN FIRE SYSTEM IS ARMED, FS-C TO FS-NC SHOULD HAVE CONTINUITY

*FIRE SYSTEM DRY CONTACT WIRING EXAMPLES

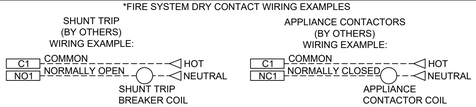

CABINET DETAILS

DRAWING NOT TO SCALE

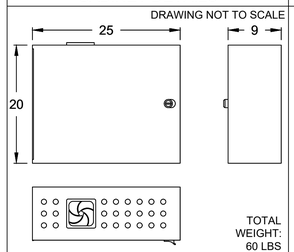

TOTAL WEIGHT: 60 LBS

MOUNTING LOCATION:
SHIP LOOSE ENCLOSURE

NOTES:
1) WHEN CONTROLS ARE MOUNTED IN HOOD-MOUNTED OR WALL-MOUNTED UTILITY CABINET, FOR HOOD OR WALL CABINET DIMENSIONS SEE HOOD SUBMITTAL.

2) MINIMUM OF 36" OF CLEARANCE RECOMMENDED IN FRONT OF CONTROL CABINET

USER INTERFACE DETAILS

DRAWING NOT TO SCALE

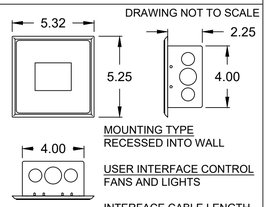

MOUNTING TYPE
RECESSED INTO WALL

USER INTERFACE CONTROL
FANS AND LIGHTS

INTERFACE CABLE LENGTH
50FT (FACTORY PROVIDED)

ZONE CONFIGURATION

ZONE #	ZONE	ROOM TEMP
1	Z1	PRESET

HOOD CONFIGURATION

HOOD #	HOOD	HOOD MARK	ZONE	EXHAUST	SUPPLY	MB-TEMP SENSORS	HCB
1	H1	HOOD1 - TYPE I SECTION 1	Z1	E1	S1	TS1	NO
2	H2	EYEBROW HOOD	Z1	E2	S1	TS2	NO

WIRING DIAGRAM CODE: ####
JOB NAME: LAKESIDE USD CENTRAL KITCHEN REV2
MODEL: XKC-CV-SB-21-2-1-0
SERIAL NUMBER: WDSN#
MARK: CONTROL SYSTEM
DOC NUMBER: #### REV: ####

DEFAULT SETTINGS / PARAMETRES PAR DEFAUT

FACTORY SETTINGS
TYPE: CV
CONFIGURATION: STANDARD
ZONES: 1
HOODS: 2
SUMPS: 0
EXHAUST FANS: 2
SUPPLY FANS: 1
MB ROOM SENSOR: NO
MB TEMP SENSORS: 2
HIGH TEMP FAULT: NO
FREEZE PROTECTION: YES
GAS RESET: YES
FAN PROVING: NO
BMS: BACNET MSTP

ZONE SETTINGS
SEE ZONE CONFIGURATION IN TABLE ON LEFT

HOOD SETTINGS
SEE HOOD CONFIGURATION IN TABLE ON LEFT

EXHAUST FAN SETTINGS
SEE FAN CONFIGURATION IN TABLE ON LEFT

SUPPLY FAN SETTINGS
SEE FAN CONFIGURATION IN TABLE ON LEFT

SENSOR SETTINGS
SEE HOOD CONFIGURATION IN TABLE ON LEFT

USER INTERFACE SETTINGS (MB)
FAN & LIGHT BUTTONS: SHOW BOTH (SEPERATE)

USER INTERFACE SETTINGS (HCB)
NA

GENERAL SETTINGS
TIME ZONE: CENTRAL DAYLIGHT (DEFAULT)

FIRE/FAULT SETTINGS
EXHAUST DURING FIRE: MAX
SUPPLY DURING FIRE: OFF
LIGHTS DURING FIRE: OFF

BMS SETTINGS
BAUD RATE: 9600
MAC ADDRESS: 0
MAX MASTER: 127
MAX INFO FRAMES: 20

PRG VERSION: V4

FAN CONFIGURATION

FAN #	TYPE	FAN	FAN MARK	ZONE	MIN CFM	MAX CFM	MODBUS VFD	VFD ADDRESS	MIN FREQ.	MAX FREQ.	MIN VDC	MAX VDC
1	EXHAUST	E1	KEF-1	Z1	-	1600	YES	1	28	56	-	-
2	EXHAUST	E2	KEF-2 (EYEBROW HOOD)	Z1	-	1000	NO	-	-	-	-	10.0
3	SUPPLY	S1	MUA-1	Z1	-	2080	YES	3	36	71	-	-

LAKESIDE USD CENTRAL KITCHEN REV2

PROJECT 4/28/2023

MARK

CONTROL SYSTEM

ACCUREX SOUTHERN CA & HAWAII
JONATHAN CABRERA
JONATHAN.CABRERA@ACCUREX.COM
(509)430-5326

ACCUREX

ECONOMY RESTAURANT EQUIPMENT & SUPPLY CO.
Suppliers, Designers, and Consultants to the Foodservice Industry
WWW.ECONOMYRESTAURANTEQUIP.COM
A Proud NEFA Partner

1111 GRAND AVE.
SAN MARCOS, CA 92078
P.760 471 2761

LAKESIDE UNION SCHOOL DISTRICT

CENTRAL KITCHEN MODERNIZATION
12335 WOODSIDE AVE.
LAKESIDE, CA 92040

EXHAUST SYSTEM DETAILS

DATE	REMARKS
5/12/23	SUBMITTAL 1

DRAWN BY - JTO

K3.4

2229_LAKESIDEUSD.DWG

FIRE SYSTEM INFORMATION

MARK	MODEL	LOCATION	FLOW POINTS		SUPPLY LINE	DETECTION	MARK(S) PROTECTED BY FIRE SYSTEM
			HOODS	PCU			
FIRE SUPPRESSION SYSTEM	ANSUL R-102 WET CHEMICAL	REMOTE MOUNTED	2 UTILIZED 5 AVAILABLE		CONTINUOUS	FUSIBLE LINK	HOOD1 - TYPE I SECTION 1

FIRE SYSTEM OPTIONS AND ACCESSORIES

FULL INSTALLATION (INCLUDES PRE-PIPED HOOD(S) WITH DETECTION AND FACTORY COORDINATED INSTALL)
CHROME SLEEVES FOR FACTORY PROVIDED APPLIANCES DROPS - INCLUDED
METAL BLOW-OFF CAPS - INCLUDED
GAS VALVE - INCLUDED - MECHANICAL SHUTOFF VALVE, 2", (ANSUL) - PART# ANSULMECHSHUTOFFVALVE200
HOOD SUPPRESSION TANK - INCLUDED - 1.5 GAL. - [(1) 1.5 TANK(S)]
REMOTE PULL STATION - STANDARD - FIELD INSTALLATION AT SINGLE POINT OF EGRESS

ANSUL R102 (WET CHEMICAL) FIRE PROTECTION SYSTEM - MODEL FSSC

CONTROL PANEL

1. STAINLESS STEEL ENCLOSURE
2. AGENT STORAGE TANK
3. EXPELLENT GAS CARTRIDGE
4. ANSUL AUTOMAN RELEASE
5. REGULATOR
6. KNOCKOUT FOR WIRING MICROSWITCH

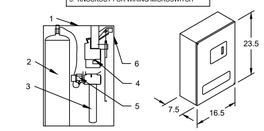

NOT TO SCALE

NOTES:

WET CHEMICAL FIRE PROTECTION SYSTEM TO BE ANSUL R-102, DESIGNED IN COMPLIANCE WITH UL 300 REQUIREMENTS.
-VERIFICATION OF ALL COOKING EQUIPMENT MAKE, MODEL AND LOCATION REQUIRED FOR ALL FIRE PROTECTION SYSTEMS.
-ALL FIRE SYSTEM PIPING IS STANDARDLY TO THE RIGHT END OF THE HOOD UNLESS A WALL IS LOCATED ON THE RIGHT END.
-ANSUL AUTOMAN RELEASE TO BE LOCATED WITHIN 60" OF HOOD.

THE BASIC FIRE SYSTEM WILL INCLUDE THE FOLLOWING:
-GAS SHUT-OFF VALVE, IF REQUIRED, TO BE SUPPLIED BY MANUFACTURER (UP TO 2" DIAMETER AS STANDARD), AND INSTALLED BY A LICENSED PLUMBER.
-MICRO SWITCH TO BE SUPPLIED BY MANUFACTURER FOR CONNECTION TO, BUT NOT LIMITED TO, BUILDING ALARM SYSTEM(S), EXHAUST AND SUPPLY FANS AND ELECTRICAL POWER SHUT DOWN. FIELD WIRING AND CONNECTIONS TO BE PERFORMED BY A LICENSED ELECTRICIAN.

THE BASIC FIRE SYSTEM DOES NOT INCLUDE THE FOLLOWING:
-FULL DUMP TEST OTHER THAN WHT IS SPECIFIED PER THE INSTALLATION MANUAL, OR TO SATISFY A STATE OR LOCAL CODE. PERMIT AND TESTING FEES ARE NOT INCLUDED UNLESS NOTED UNDER THE EQUIPMENT SCHEDULE FOR THE FIRE SYSTEM.
-MORE THEN TWO TRIPS TO THE JOBSITE OR SPECIAL TRANSPORTATION, OR OVERNIGHT LODGING REQUIREMENTS IN REMOTE AREAS. NORMAL TRAVEL DISTANCE IS FIRST 50 MI. (80.5 KM) FROM OFFICE.
- SPECIAL CLASSES OR ADDITIONAL LABOR FOR ACCESS TO SECURITY SENSITIVE AREAS.
-INSTALLATION OF GAS SHUT-OFF VALVE.
-SPECIAL DRAWINGS REQUIRED TO SATISFY STATE OR LOCAL CODE. PLAN EXAMINATION FEES, PE OR FS APPROVAL STAMP.
-UNION LABOR, GOVERNMENT LABOR, OR PREVAILING WAGES REQUIRED FOR FINAL FIELD HOOKUP.
-ANY AND ALL ELECTRICAL COMPONENTS/CONNECTIONS REQUIRED TO SHUT DOWN FANS, SHUT OFF DEVICE FOR ELECTRIC COOKING EQUIPMENT (SHUNT TRIP BREAKER), OR ACTIVATE AN ALARM SYSTEM, ETC.
-ANY DISMANTLING OR REASSEMBLY REQUIRED TO GAIN ACCESS TO THE FIRE SUPPRESSION PIPING LOCATED ON THE TOP OF THE HOOD.
-ROUGH-IN HIDDEN CONDUIT FOR REMOTE PULL STATION OR GAS VALVE (FLUSH MOUNTED PULL STATION).
-INSTALLATION OF MORE THAN (1) REMOTE PULL STATIONS OR DISTANCES GREATER THAN 20 FT (6.1M.).
-PARTS OR LABOR REQUIRED TO CORRECT PIPING DUE TO COOKING EQUIPMENT CHANGES OR DEVIATION FROM PLANS, OR ANY CHARGES FOR MISSING OR ADDITIONAL PARTS OTHER THEN THOSE INDICATED ON THE FIRE SUPPRESSION DETAIL.

WIRING DIAGRAMS W/DPDT MICRO SWITCH

DPDT SWITCHES PROVIDED BY MANUFACTURER MAY BE WIRED PER TYPICAL EXAMPLES SHOWN. VERIFY WITH LOCAL CODES AND EQUIPMENT SUPPLIED AS THE CONNECTION NEEDED FOR YOUR INSTALLATION.

CONNECTION TO BUILDINGS ALARM

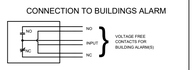

CONNECTION TO COOKING EQUIPMENT SHUT DOWN

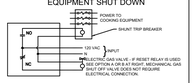

CONNECTION TO FAN SHUT DOWN

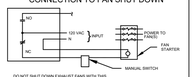

DO NOT SHUT DOWN EXHAUST FANS WITH THIS METHOD OF WIRING, IF PROHIBITED BY LOCAL CODES.

NOTES:
1. ———— DENOTES FIELD INSTALLATION.
2. ———— DENOTES FACTORY INSTALLATION.
3. DO NOT USE BLACK WIRE ON SNAP-ACTION SWITCH IN NORMAL INSTALLATION. BLACK WIRE TO BE USED ONLY FOR EXTRANEOUS ALARM, LIGHT CIRCUITS, ETC.

ACCUREX

PROJECT 4/28/2023

LAKESIDE USD CENTRAL KITCHEN REV2

MARK

FIRE SUPPRESSION SYSTEM

ACCUREX SOUTHERN CA & HAWAII
JONATHAN CABRERA
JONATHAN.CABRERA@ACCUREX.COM
(509)430-5326

ECONOMY
RESTAURANT EQUIPMENT & SUPPLY CO.
Suppliers, Designers, and Consultants to the Foodservice Industry
WWW.ECONOMYRESTAURANTEQUIP.COM
A Proud NEFA Partner
1111 GRAND AVE.
SAN MARCOS, CA 92078
P.760 471 2761

LAKESIDE UNION SCHOOL DISTRICT

CENTRAL KITCHEN MODERNIZATION
12335 WOODSIDE AVE.
LAKESIDE, CA 92040

EXHAUST SYSTEM DETAILS

DATE	REMARKS
5/12/23	SUBMITTAL 1

DRAWN BY - JTO

K3.5

22201_LAKESIDEUSD.DWG